XT25Q16D

Quad IO Serial NOR Flash
Datasheet

* Information furnished is believed to be accurate and reliable. However, XTX Technology Limited assumes no responsibility for the consequences of use of such information or for any infringement of patents of other rights of third parties which may result from its use. No license is granted by implication or otherwise under any patent rights of XTX Technology Limited. Specifications mentioned in this publication are subject to change without notice. This publication supersedes and replaces all information previously supplied. XTX Technology Limited products are not authorized for use as critical components in life support devices or systems without express written approval of XTX Technology Limited. The XTX logo is a registered trademark of XTX Technology Limited. All other names are the property of their respective own.

Serial NOR Flash Memory

1.8V Multi I/O with 4KB, 32KB & 64KB Sector/Block Erase

- **16M-bit Serial Flash**
  - 2048K-bytes
  - 256 bytes per programmable page
- **Standard, Dual, Quad SPI, DTR**
  - Standard SPI: SCLK, CS#, SI, SO, WP#, HOLD#/RESET#
  - Dual SPI: SCLK, CS#, IO0, IO1, WP#, HOLD#/RESET#
  - Quad SPI: SCLK, CS#, IO0, IO1, IO2, IO3
  - QPI: SCLK, CS#, IO0, IO1, IO2, IO3
  - SPI/QPI DTR(Double Transfer Rate) Read
- **Flexible Architecture**
  - Sector of 4K-bytes
  - Block of 32/64k-bytes
- **Advanced security Features**
  - 2*1024-Bytes Security Registers With OTP Lock
- **Support 128 bits Unique ID**
- **Software/Hardware Write Protection**
  - Write protect all/portion of memory via software
  - Enable/Disable protection with WP# Pin
  - Top or Bottom, Sector or Block selection
- **Package Options**
  - See 1.1 Available Ordering OPN
  - All Pb-free packages are compliant RoHS, Halogen-Free and REACH.
- **Temperature Range & Moisture Sensitivity Level**
  - Industrial Level Temperature. (-40℃ to +85℃), MSL3
  - Industrial Plus Level Temperature. (-40℃ to +105℃), MSL3
- **Power Consumption**
  - 0.3uA typical Deep Power-Down current
- **Single Power Supply Voltage**
  - 1.65~2.1V
- **Endurance and Data Retention**
  - Minimum 100,000 Program/Erase Cycle
  - 20-year Data Retention typical
- **High Speed Clock Frequency**
  - 108MHz for fast read with 30PF load
  - Dual I/O Data transfer up to 216Mbits/s
  - Quad I/O Data transfer up to 432Mbits/s
  - QPI Mode Data transfer up to 432Mbits/s
  - DTR Quad I/O Data transfer up to 688Mbits/s
- **Program/Erase Speed**
  - Page Program time: 0.35ms typical
  - Sector Erase time: 40ms typical
  - Block Erase time: 0.12/0.15s typical
  - Chip Erase time: 4.5s typical

CONTENTS

1. GENERAL DESCRIPTION 5

1.1. Available Ordering OPN 5

1.2. Connection Diagram 5

1.3. Pin Description 6

1.4. Block Diagram 6

1.5. Memory Description 7

2. DEVICE OPERATION 8

2.1. SPI Mode 8

2.2. QPI Mode 8

2.3. DTR Read 8

2.4. Hold Function 8

2.5. RESET Function 9

2.6. The Reset Signaling Protocol (JEDEC 252) 10

3. STATUS REGISTER 11

4. DATA PROTECTION 14

5. COMMANDS DESCRIPTION 16

5.1. Basic Setting 20

5.2. Memory Read 24

5.3. Read Under DTR 32

5.4. Memory Program 36

5.5. Memory Erase 39

5.6. Security Register 43

5.7. Status Register 45

5.8. Deep Power Down 47

5.9. Software Reset 50

5.10. Read ID 51

5.11. Advanced Data Protection 56

5.12. Suspend 60

5.13. Wrap 62

6. ELECTRICAL CHARACTERISTICS 70

6.1. Power-on Timing 70

6.2. Initial Delivery State 70

6.3. Latch up Characteristics 70

6.4. Absolute Maximum Ratings 71

6.5. Capacitance Measurement Condition 71

6.6. DC Characteristics 72

6.7. AC Characteristics 74

7. ORDERING INFORMATION 78

8. PACKAGE INFORMATION 79

8.1. Package SOP8 150MIL 79

8.2. Package DFN8 (2x3x0.4) mm 80

9. REVISION HISTORY 81

1. GENERAL DESCRIPTION

The XT25Q16D (16M-bit) Serial flash supports standard Serial Peripheral Interface (SPI), Dual/Quad SPI: Serial Clock, Chip Select, Serial Data I/O0 (SI), I/O1 (SO), I/O2 (WP#), and I/O3 (HOLD#/RESET#). The Dual I/O data is transferred with speed up to 216Mbits/s and the Quad I/O & Quad output data is transferred with speed up to 432Mbits/s.

1.1. Available Ordering OPN

OPN	Package Type	Package Carrier
XT25Q16DSOIGU	SOP8 150mil	Tube
XT25Q16DSOIGT	SOP8 150mil	Tape & Reel
XT25Q16DSOHGU	SOP8 150mil	Tube
XT25Q16DDTIGT	DFN8 2x3x0.4 mm	Tape & Reel

1.2. Connection Diagram

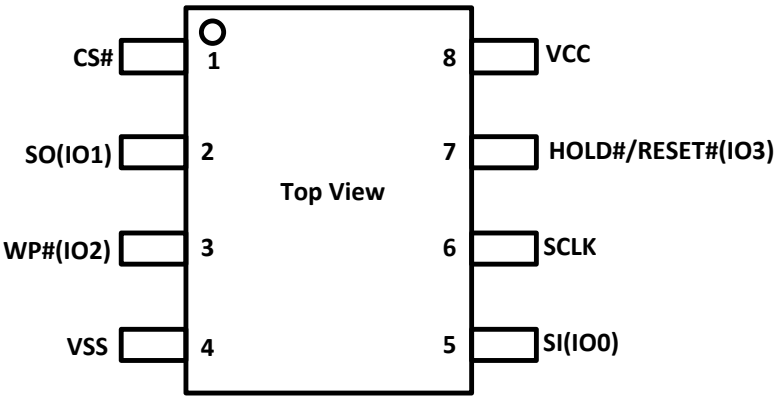

8-pin SOP

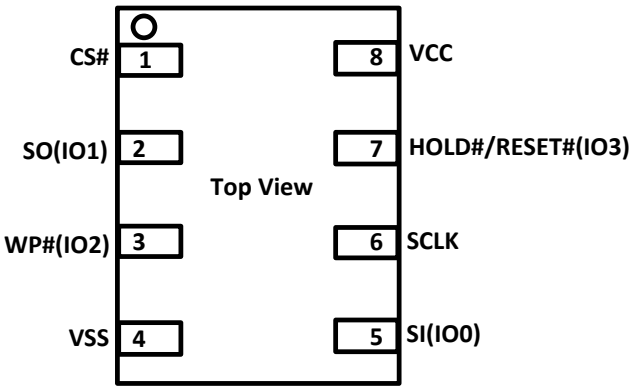

8-pin DFN

1.3. Pin Description

Pin Name	I/O	Description
CS#	I	Chip Select Input
SO (IO1)	I/O	Data Output (Data Input Output 1)
WP# (IO2)	I/O	Write Protect Input (Data Input Output 2)
VSS		Ground
SI (IO0)	I/O	Data Input (Data Input Output 0)
SCLK	I	Serial Clock Input
HOLD#/RESET# (IO3)	I/O	Hold or Reset Input (Data Input Output 3)
VCC		Power Supply

Notes:
1. IO0 and IO1 are used for Standard and Dual SPI instructions
2. IO0 – IO3 are used for Quad SPI instructions, WP# & HOLD# (or Reset#) functions are only available for Standard/Dual SPI.

1.4. Block Diagram

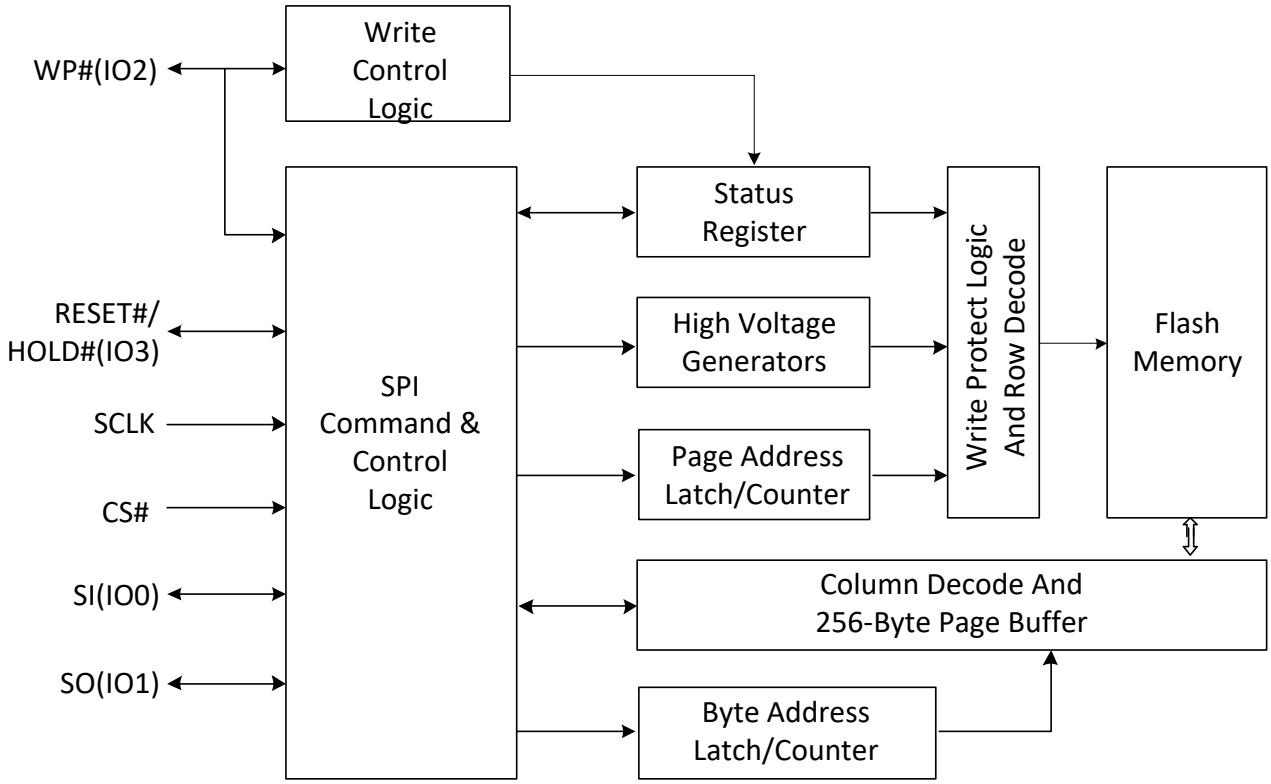

1.5. Memory Description

Uniform Block/Sector Architecture

Block(64K-byte)	Block(32K-byte)	Sector(4K-byte)	Address Range	
31	63	511	1FF000H	1FFFFFH
		……	……	……
		504	1F8000H	1F8FFFH
	62	503	1F7000H	1F7FFFH
		……	……	……
		496	1F0000H	1F0FFFH
30	61	495	1EF000H	1EFFFFH
		……	……	……
		488	1E8000H	1E8FFFH
	60	487	1E7000H	1E7FFFH
		……	……	……
		480	1E0000H	1E0FFFH
……		……	……	……
		……	……	……
		……	……	……
1	3	31	01F000H	01FFFFH
		……	……	……
		24	018000H	018FFFH
	2	23	017000H	017FFFH
		……	……	……
		16	010000H	010FFFH
0	1	15	00F000H	00FFFFH
		……	……	……
		8	008000H	008FFFH
	0	7	007000H	007FFFH
		……	……	……
		0	000000H	000FFFH

2. DEVICE OPERATION

2.1. SPI Mode

Standard SPI

The device features a serial peripheral interface on 4 signals bus: Serial Clock (SCLK), Chip Select (CS#), Serial Data Input (SI) and Serial Data Output (SO). Both SPI bus mode 0 and 3 are supported. Input data is latched on the rising edge of SCLK and data shifts out on the falling edge of SCLK.

Dual SPI

The device supports Dual SPI operation when using the "Dual Output Fast Read" and "Dual I/O Fast Read" (3BH and BBH) commands. These commands allow data to be transferred to or from the device at two times the rate of the standard SPI. When using the Dual SPI command the SI and SO pins become bidirectional I/O pins: IO0 and IO1.

Quad SPI

The device supports Quad SPI operation when using the "Quad Output Fast Read"," Quad I/O Fast Read", "Quad I/O Word Fast Read" (6BH, EBH, E7H) commands. These commands allow data to be transferred to or from the device at four times the rate of the standard SPI. When using the Quad SPI command the SI and SO pins become bidirectional I/O pins: IO0 and IO1, and WP# and HOLD# pins become IO2 and IO3. Quad SPI commands require the non-volatile Quad Enable bit (QE) in Status Register to be set.

2.2. QPI Mode

The device supports Quad Peripheral Interface (QPI) operations only when the device is switched from Standard/Dual/Quad SPI mode to QPI mode using the "Enable the QPI (38H)" command. The QPI mode utilizes all four IO pins to input the command code. Standard/Dual/Quad SPI mode and QPI mode are exclusive. Only one mode can be active at any given times. "Enable the QPI (38H)" and "Disable the QPI (FFH)" commands are used to switch between these two modes. Upon power-up and after software reset using "Enable Chip Reset (66H)" and "Reset (99H)" command, the default state of the device is Standard/Dual/Quad SPI mode. The QPI mode requires the non-volatile Quad Enable bit (QE) in Status Register to be set.

2.3. DTR Read

To effectively improve the read operation throughput without increasing the serial clock frequency, The device introduces multiple DTR (Double Transfer Rate) Read instructions that support Standard/Dual/Quad SPI and QPI modes. The byte-long instruction code is still latched into the device on the rising edge of the serial clock similar to all other SPI/QPI instructions. Once a DTR instruction code is accepted by the device, the address input and data output will be latched on both rising and falling edges of the serial clock.

2.4. Hold Function

The HOLD# signal goes low to stop any serial communications with the device, but doesn't stop the operation of write status register, programming, or erasing in progress.

The operation of HOLD, need CS# keep low, and starts on falling edge of the HOLD# signal, with SCLK signal being low (if SCLK is not being low, HOLD operation will not start until SCLK being low). The HOLD condition ends on rising edge of HOLD# signal with SCLK being low (If SCLK is not being low, HOLD operation will not end until SCLK being low).

The SO is high impedance, both SI and SCLK don't care during the HOLD operation, if CS# drives high during HOLD operation, it will reset the internal logic of the device. To re-start communication with chip, the HOLD# must be at high and then CS# must be at low.

Hold Condition

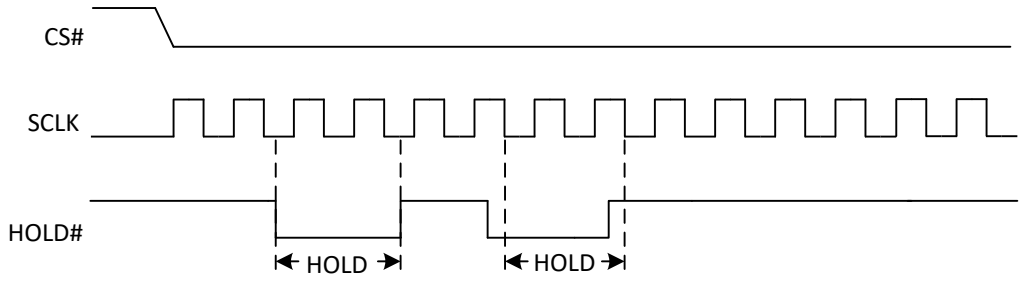

2.5. RESET Function

The RESET# pin allows the device to be reset by the control. The pin7 can be configured as a RESET# pin depending on the status register setting, which need QE=0 and HOLD/RST=1.

The RESET# pin goes low for a period of tRLRH or longer will reset the flash. After reset cycle, the flash is at the following states:

- Standby mode.
- All the volatile bits will return to the default status as power on.

Reset Timing

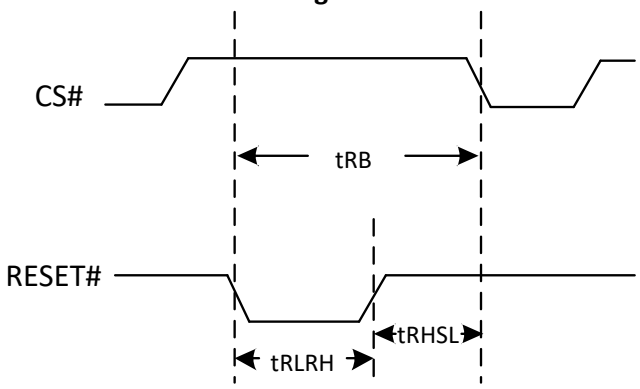

Symbol	Parameter	Min	Typ	Max	Unit.
tRLRH	Reset Pulse Width	1			us
tRHSL	Reset High Time Before Read	200			us
tRB	Reset Recovery Time			1	ms

2.6. The Reset Signaling Protocol (JEDEC 252)

The protocol consists of two phases: reset request, and completion (a device internal reset).

Reset Request

1. CS# is driven active low to select the SPI slave (Note1)
2. Clock (SCK) remains stable in either a high or low state (Note 2)
3. SI / IO0 is driven low by the bus master, simultaneously with CS# going active low, (Note 3)
4. CS# is driven inactive (Note 4).

Repeat the steps 1-4 each time alternating the state of SI (Note 5).

NOTE 1 This powers up the SPI slave.

NOTE 2 This prevents any confusion with a command, as no command bits are transferred (clocked).

NOTE 3 No SPI bus slave drives SI during CS# low before a transition of SCK, i.e., slave streaming output active is not allowed until after the first edge of SCK.

NOTE 4 The slave captures the state of SI on the rising edge of CS#.

NOTE 5 SI is low on the first CS#, high on the second, low on the third, high on the fourth (This provides a 5h pattern, to differentiate it from random noise).

Reset Completion

After the fourth CS# pulse, the slave triggers its internal reset.

Timing Diagram and Timing Parameters

Figure 1. Reset Signaling Protocol

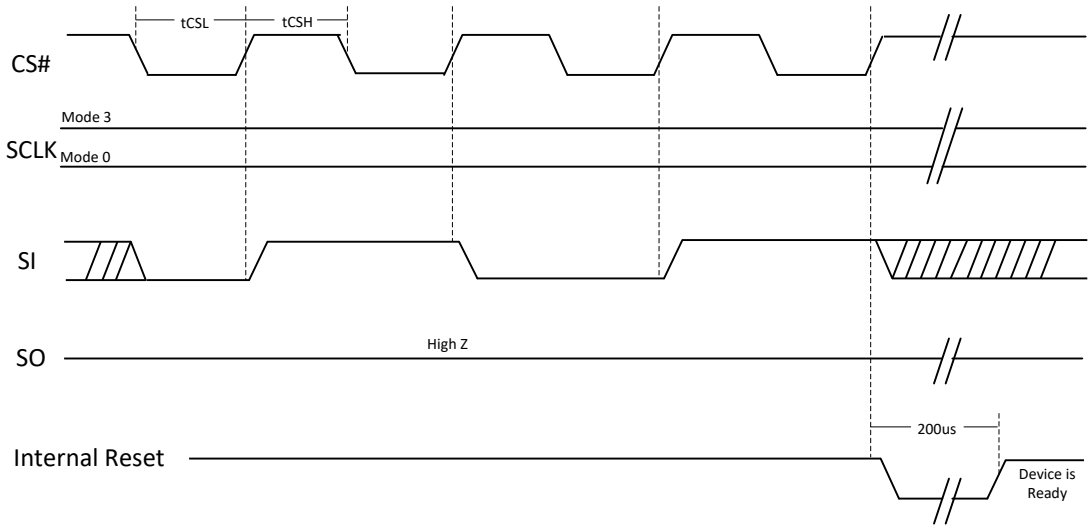

3. STATUS REGISTER

S23	S22	S21	S20	S19	S18	S17	S16
Hold/RST	DRV1	DRV0	Reserved	Reserved	WPS	LC	Reserved

S15	S14	S13	S12	S11	S10	S9	S8
SUS1	CMP	Reserved	LB2	LB1	SUS2	QE	SRP1

S7	S6	S5	S4	S3	S2	S1	S0
SRP0	BP4	BP3	BP2	BP1	BP0	WEL	WIP

HOLD/RST

The HOLD/RST bit is used to determine whether HOLD# or RESET# function should be implemented on the hardware pin for 8-pin packages. When HOLD/RST=0, the pin acts as HOLD#, When the HOLD/RST=1, the pin acts as RESET#. However, the HOLD# or RESET# function are only available when QE=0, If QE=1, The HOLD# and RESET# functions are disabled, the pin acts as dedicated data I/O pin.

DRV1, DRV0

The Output Driver Strength (DRV1 & DRV0) bits are used to determine the output driver strength for the Read operations.

DRV1	DRV0	Driver Strength
0	0	25%
0	1	50%
1	0	75% (default)
1	1	100%

WPS

The WPS bit is used to select which Write Protect scheme should be used. When WPS=0, the device will use the combination of CMP, BP (4:0) bits to protect a specific area of the memory array. When WPS=1, the device will utilize the Individual Block Locks to protect any individual sector or blocks. The default value for all Individual Block Lock bits is 1 upon device power on or after reset.

LC

The Latency Code (LC) selects the mode and number of dummy cycles between the end of address and the start of read data output for command 0DH under QPI mode and command EDH under SPI/QPI modes.

Some read commands send mode bits following the address to indicate that the next command will be of the same type with an implied, rather than an explicit instruction. The next command thus does not provide an instruction Byte, only a new address and mode bits. This reduces the time needed to send each command when the same command type is repeated in a sequence of commands.

Dummy cycles provide additional latency that is needed to complete the initial read access of the flash array before data can be returned to the host system. Some read commands require additional latency cycles as the SCLK frequency is increased.

Latency Code and DTR Mode Frequency Table

LC	Dummy Clock Cycles
0	8 (Default)
1	6

SUS1, SUS2

The SUS1 and SUS2 bits are read only bits in the status register (S15 and S10) that are set to 1 after executing an Program/Erase Suspend (75H) command (The Erase Suspend will set the SUS1 to 1,and the Program Suspend will set the SUS2 to 1). The SUS1 and SUS2 bits are cleared to 0 by Program/Erase Resume (7AH) command, software reset (66H+99H) command as well as a power-down, power-up cycle.

CMP

The CMP bit is a non-volatile Read/Write bit in the Status Register (S14). It is used in conjunction the BP4-BP0 bits to provide more flexibility for the array protection. Please see the Status register Memory Protection table for details. The default setting is CMP=0.

LB1, LB2

The LB1, LB12 bits are non-volatile One Time Program (OTP) bits in Status Register (S11-S12) that provide the write protect control and status to the Security Registers. The default state of LB1-LB2 are 0, the security registers are unlocked. The LB1-LB2 bits can be set to 1 individually using the Write Register instruction. The LB1-LB2 bits are One Time Programmable, once its set to 1, the Security Registers will become read-only permanently.

QE

The Quad Enable (QE) bit is a non-volatile Read/Write bit in the Status Register that allows Quad operation. When the QE bit is set to 0 (Default) the WP# pin and HOLD# pin are enable. When the QE pin is set to 1, the Quad IO2 and IO3 pins are enabled. (The QE bit should never be set to 1 during standard SPI or Dual SPI operation if the WP# or HOLD# pins are tied directly to the power supply or ground).

SRP1, SRP0

The Status Register Protect (SRP1 and SRP0) bits are non-volatile Read/Write bits in the status register. The SRP bits control the type of write protection: software protection, hardware protection, power supply lock-down or one-time programmable protection.

SRP1	SRP0	WP#	Status Register	Description
0	0	X	Software Protected	The Status Register can be written to after a Write Enable command, WEL=1. (Default)
0	1	0	Hardware Protected	WP#=0, the Status Register locked and cannot be written to.
0	1	1	Hardware Unprotected	WP#=1, the Status Register is unlocked and can be written to after a Write Enable command, WEL=1.
1	0	X	Power Supply Lock-Down	Status Register is protected and cannot be written to again until the next Power-Down, Power-Up cycle. [Note 1]
1	1	X	One-Time Program [Note 2]	Status Register is protected and cannot be written to.

NOTE:

1. When SRP1, SRP0= (1, 0), a Power-Down, Power-Up cycle will change SRP1, SRP0 to (0, 0) state.
2. This feature is available on special order. Please contact XTX for details.

BP4, BP3, BP2, BP1, BP0

The Block Protect (BP4, BP3, BP2, BP1, BP0) bits are non-volatile. They define the size of the area to be software protected against Program and Erase commands. These bits are written with the Write Status Register (WRSR) command. When the Block Protect (BP4, BP3, BP2, BP1, BP0) bits are set to 1, the relevant memory area (as defined in Table 1.0 & 1.1) becomes protected against Page Program (PP), Sector Erase (SE) and Block Erase (BE) commands. The Block Protect(BP4, BP3, BP2, BP1, BP0) bits can be written provided that the Hardware Protected mode has not been set. The Chip Erase (CE) command is executed if the Block Protect (BP2, BP1, BP0) bits are 0 and CMP=0 or the Block Protect (BP2, BP1, BP0) bits are 1 and CMP=1.

WEL

The Write Enable Latch (WEL) bit indicates the status of the internal Write Enable Latch. When set to 1 the internal Write Enable Latch is set, when set to 0 the internal Write Enable Latch is reset and no Write Status Register, Program or Erase command is accepted.

WIP

The Write In Progress (WIP) bit indicates whether the memory is busy in program/erase/write status register progress. When WIP bit sets to 1, means the device is busy in program/erase/write status register progress, when WIP bit sets 0, means the device is not in program/erase/write status register progress.

4. DATA PROTECTION

The device provide the following data protection methods:

- Write Enable (WREN) command: The WREN command sets the Write Enable Latch bit (WEL). The WEL bit will return to reset by the following situation:
  - Power-Up / Software reset (66H+99H)
  - Write Disable (WRDI)
  - Write Status Register (WRSR)
  - Page Program (PP)
  - Sector Erase (SE) / Block Erase (BE) / Chip Erase (CE)
  - Erase Security Register / Program Security Register
- Software Protection Mode: The Block Protect (BP4, BP3, BP2, BP1, BP0) bits, WPS bit and CMP bit define the section of the memory array that can be read but cannot be changed.
- Hardware Protection Mode: WP# goes low to prevent writing status register.
- Deep Power-Down Mode: In Deep Power-Down Mode, all commands are ignored except the Release from Deep Power-Down Mode command (ABH) and software reset (66H+99H).

Table1.0 XT25Q16D Protected area size (WPS=0, CMP=0)

Status Register Content					Memory Content			
BP4	**BP3**	**BP2**	**BP1**	**BP0**	**Blocks**	**Addresses**	**Density**	**Portion**
X	X	0	0	0	NONE	NONE	NONE	NONE
0	0	0	0	1	31	1F0000H-1FFFFFH	64KB	Upper 1/32
0	0	0	1	0	30 to 31	1E0000H-1FFFFFH	128KB	Upper 1/16
0	0	0	1	1	28 to 31	1C0000H-1FFFFFH	256KB	Upper 1/8
0	0	1	0	0	24 to 31	180000H-1FFFFFH	512KB	Upper 1/4
0	0	1	0	1	16 to 31	100000H-1FFFFFH	1M	Upper 1/2
0	1	0	0	1	0	000000H-00FFFFH	64KB	Lower 1/32
0	1	0	1	0	0 to 1	000000H-01FFFFH	128KB	Lower 1/16
0	1	0	1	1	0 to 3	000000H-03FFFFH	256KB	Lower 1/8
0	1	1	0	0	0 to 7	000000H-07FFFFH	512KB	Lower 1/4
0	1	1	0	1	0 to 15	000000H-0FFFFFH	1M	Lower 1/2
X	X	1	1	X	0 to 31	000000H-1FFFFFH	2M	ALL
1	0	0	0	1	31	1FF000H-1FFFFFH	4KB	Top Block
1	0	0	1	0	31	1FE000H-1FFFFFH	8KB	Top Block
1	0	0	1	1	31	1FC000H-1FFFFFH	16KB	Top Block
1	0	1	0	X	31	1F8000H-1FFFFFH	32KB	Top Block
1	1	0	0	1	0	000000H-000FFFH	4KB	Bottom Block
1	1	0	1	0	0	000000H-001FFFH	8KB	Bottom Block
1	1	0	1	1	0	000000H-003FFFH	16KB	Bottom Block
1	1	1	0	X	0	000000H-007FFFH	32KB	Bottom Block

Table1.1 XT25Q16D Protected area size (WPS=0, CMP=1)

Status Register Content					Memory Content			
BP4	BP3	BP2	BP1	BP0	Blocks	Addresses	Density	Portion
X	X	0	0	0	0 to 31	000000H-1FFFFFH	2M	ALL
0	0	0	0	1	0 to 30	000000H-1EFFFFH	1984KB	Lower 31/32
0	0	0	1	0	0 to 29	000000H-1DFFFFH	1920KB	Lower 15/16
0	0	0	1	1	0 to 27	000000H-1BFFFFH	1792KB	Lower 7/8
0	0	1	0	0	0 to 23	000000H-17FFFFH	1536KB	Lower 3/4
0	0	1	0	1	0 to 15	000000H-0FFFFFH	1M	Lower 1/2
0	1	0	0	1	1 to 31	010000H-1FFFFFH	1984KB	Upper 31/32
0	1	0	1	0	2 to 31	020000H-1FFFFFH	1920KB	Upper 15/16
0	1	0	1	1	4 to 31	040000H-1FFFFFH	1792KB	Upper 7/8
0	1	1	0	0	8 to 31	080000H-1FFFFFH	1536KB	Upper 3/4
0	1	1	0	1	16 to 31	100000H-1FFFFFH	1M	Upper 1/2
X	X	1	1	X	NONE	NONE	NONE	NONE
1	0	0	0	1	0 to 31	000000H-1FEFFFH	2044KB	Lower 511/512
1	0	0	1	0	0 to 31	000000H-1FDFFFH	2040KB	Lower 255/256
1	0	0	1	1	0 to 31	000000H-1FBFFFH	2032KB	Lower 127/128
1	0	1	0	X	0 to 31	000000H-1F7FFFH	2016KB	Lower 63/64
1	1	0	0	1	0 to 31	001000H-1FFFFFH	2044KB	Upper 511/512
1	1	0	1	0	0 to 31	002000H-1FFFFFH	2040KB	Upper 255/256
1	1	0	1	1	0 to 31	004000H-1FFFFFH	2032KB	Upper 127/128
1	1	1	0	X	0 to 31	008000H-1FFFFFH	2016KB	Upper 63/64

Table1.2 XT25Q16D Individual Block Protection (WPS=1)

Block	Sector	Address range		Individual Block Lock Operation
31	511	1FF000H	1FFFFFH	**The Top/Bottom block is protected by sector.**
	……	……	……	
	496	1F0000H	1F0FFFH	**Other 30 Blocks are protected by block**
……				
……				**Block Lock:** 36H+Address
2				**Block Unlock:** 39H+Address
1				**Read Block Lock:** 3DH+Address
0	15	00F000H	00FFFFH	**Global Block Lock:** 7EH
	……	……	……	
	0	000000H	000FFFH	**Global Block Unlock:** 98H

5. COMMANDS DESCRIPTION

All commands, addresses and data are shifted in and out of the device, beginning with the most significant bit on the first rising edge of SCLK after CS# is driven low. Then, the one-byte command code must be shifted in to the device, most significant bit first on SI, each bit being latched on the rising edges of SCLK.

See Table 2, every command sequence starts with a one-byte command code. Depending on the command, this might be followed by address bytes, or by data bytes, or by both or none. CS# must be driven high after the last bit of the command sequence has been shifted in. For the command of Read, Fast Read, Read Status Register or Release from Deep Power-Down, and Read Device ID, the shifted-in command sequence is followed by a data-out sequence. CS# can be driven high after any bit of the data-out sequence is being shifted out.

For the command of Page Program, Sector Erase, Block Erase, Chip Erase, Write Status Register, Write Enable or Write Disable command, CS# must be driven high exactly at the byte boundary, otherwise the command is rejected, and is not executed. That is CS# must be driven high when the number of clock pulses after CS# being driven low is an exact multiple of eight. For Page Program, if at any time the input byte is not a full byte, nothing will happen and WEL will not be reset.

Table 2. Commands

Command Name	SPI	QPI	Byte1	Byte2	Byte3	Byte4	Byte5	Byte6	n-Bytes
Basic Setting									
Enable QPI	√		38H						
Write Enable	√	√	06H						
Write Enable For Volatile	√	√	50H						
Write Disable	√	√	04H						
Continous Read Reset / Disable QPI	√	√	FFH						
Memory Read									
Normal Read	√		03H	A23-A16	A15-A8	A7-A0	(D7-D0)	(Next byte)	(continuous)
Fast Read	√	√	0BH	A23-A16	A15-A8	A7-A0	dummy	(D7-D0)	(continuous)
Dual Output Fast Read	√		3BH	A23-A16	A15-A8	A7-A0	dummy	(D7-D0)(1)	(continuous)
Dual I/O Fast Read	√		BBH	A23-A8(2)	A7-A0 M7-M0(2)	(D7-D0)(1)			(continuous)
Quad Output Fast Read	√		6BH	A23-A16	A15-A8	A7-A0	dummy	(D7-D0)(3)	(continuous)
Quad I/O Fast Read	√	√	EBH	A23-A0 M7-M0(4)	dummy(5)	(D7-D0)(3)			(continuous)
Quad I/O Word Fast Read	√		E7H	A23-A0 M7-M0(4)	dummy(6)	(D7-D0)(3)			(continuous)
Read Under DTR									
DTR Fast Read	√	√	0DH	A23-A16	A15-A8	A7-A0	Dummy	(D7-D0)	
DTR Fast Read Dual I/O	√		BDH	A23-A16	A15-A8	A7-A0	M7-M0	Dummy	(D7-D0)
DTR Fast Read Quad I/O	√	√	EDH	A23-A16	A15-A8	A7-A0	M7-M0	Dummy	(D7-D0)
Memory Program									
Page Program	√	√	02H	A23-A16	A15-A8	A7-A0	(D7-D0)	(Next byte)	
Quad Page Program	√		32H	A23-A16	A15-A8	A7-A0	(D7-D0)(3)		
Memory Erase									
Sector Erase	√	√	20H	A23-A16	A15-A8	A7-A0			
32k Block Erase	√	√	52H	A23-A16	A15-A8	A7-A0			
64k Block Erase	√	√	D8H	A23-A16	A15-A8	A7-A0			

Chip Erase	√	√	60H/C7H						
Security Register									
Read Security Register[8]	√		48H	A23-A16	A15-A8	A7-A0	dummy	(D7-D0)	
Program Security Register[8]	√		42H	A23-A16	A15-A8	A7-A0	(D7-D0)	(Next byte)	
Erase Security Register[8]	√		44H	A23-A16	A15-A8	A7-A0			
Status Register									
Read Status Register 1	√	√	05H	(S7-S0)					(continuous)
Read Status Register 2	√	√	35H	(S15-S8)					(continuous)
Read Status Register 3	√	√	15H	(S23-S16)					(continuous)
Write Status Register 1	√	√	01H	(S7-S0)					(continuous)
Write Status Register 2	√	√	31H	(S15-S8)					(continuous)
Write Status Register 3	√	√	11H	(S23-S16)					(continuous)
Deep Power-Down									
Deep Power-Down	√	√	B9H						
Release From Deep Power-Down	√	√	ABH						
Release From Deep Power-Down, And Read Device ID	√	√	ABH						
Software Reset									
Enabale Reset	√	√	66H						
Reset	√	√	99H						
Read ID									
Read Manufacture ID	√	√	90H	dummy	dummy	00H	(M7-M0)	(D7-D0)	(continuous)
Read Manufacture ID Dual I/O	√		92H	A23-A8	A7-A0, M[7:0]	(M7-M0) (D7-D0)			(continuous)
Read Manufacture ID Quad I/O	√		94H	A23-A0, M[7:0]	dummy	(M7-M0) (D7-D0)			
Read JEDEC ID	√	√	9FH	(M7-M0)	(D15-D8)	(D7-D0)			(continuous)
Read Unique ID	√	√	4BH	dummy	dummy	dummy	dummy	(D7-D0)	(continuous)
Read SFDP	√	√	5AH	A23-A16	A15-A8	A7-A0	dummy	(D7-D0)	(continuous)
Advanced Data Protection									
Single Block Lock	√	√	36H	A23-A16	A15-A8	A7-A0			
Single Block Unlock	√	√	39H	A23-A16	A15-A8	A7-A0			
Read Block Lock	√	√	3DH	A23-A16	A15-A8	A7-A0			
Global Block Lock	√	√	7EH						
Global Block Unlock	√	√	98H						
Suspend									
Program Erase Suspend	√	√	75H/B0H						
Program Erase Resume	√	√	7AH/30H						
Wrap									
Set Burst With Wrap	√		77H	dummy	dummy	dummy	W6-W4		
Set Read Parameters		√	C0H	P7-P0					
Burst Read With Wrap		√	0CH	A23-A16	A15-A8	A7-A0	dummy	(D7-D0)	

NOTE:

1. Dual Output data
   IO0 = (D6, D4, D2, D0)
   IO1 = (D7, D5, D3, D1)

2. Dual Input Address
   IO0 = A22, A20, A18, A16, A14, A12, A10, A8,A6, A4, A2, A0, M6, M4, M2, M0
   IO1 = A23, A21, A19, A17, A15, A13, A11, A9,A7, A5, A3, A1, M7, M5, M3, M1

3. Quad Output Data
   IO0 = (D4, D0, ...)
   IO1 = (D5, D1, ...)
   IO2 = (D6, D2, ...)
   IO3 = (D7, D3, ...)

4. Quad Input Address
   IO0 = A20, A16, A12, A8, A4, A0, M4, M0
   IO1 = A21, A17, A13, A9, A5, A1, M5, M1
   IO2 = A22, A18, A14, A10, A6, A2, M6, M2
   IO3 = A23, A19, A15, A11, A7, A3, M7, M3

5. Quad I/O Fast Read Data
   IO0 = (x, x, x, x, D4, D0,...)
   IO1 = (x, x, x, x, D5, D1,...)
   IO2 = (x, x, x, x, D6, D2,...)
   IO3 = (x, x, x, x, D7, D3,...)

6. Quad I/O Word Fast Read Data
   IO0 = (x, x, D4, D0,...)
   IO1 = (x, x, D5, D1,...)
   IO2 = (x, x, D6, D2,...)
   IO3 = (x, x, D7, D3,...)

7. Quad I/O Word Fast Read Data: the lowest address bit must be 0.

8. Security Registers Address:
   Security Register1: A23-A16=00H, A15-A8=10H, A7-A0= Byte Address;
   Security Register2: A23-A16=00H, A15-A8=20H, A7-A0= Byte Address;

9. QPI Command, Address, Data input/output format:
   CLK# = 0 1 2 3 4 5 6 7 8 9 10 11
   IO0 = C4, C0, A20, A16, A12, A8, A4, A0, D4, D0, D4, D0
   IO1 = C5, C1, A21, A17, A13, A9, A5, A1, D5, D1, D5, D1
   IO2 = C6, C2, A22, A18, A14, A10, A6, A2, D6, D2, D6, D2
   IO3 = C7, C3, A23, A19, A15, A11, A7, A3, D7, D3, D7, D4

10. QPI mode: Release from Deep Power-Down, And Read Device ID (ABH)
    N dummy cycles should be inserted before ID read cycle, refer to C0H command

11. QPI mode: Manufacturer/Device ID (90H)
    N dummy cycles should be inserted before ID read cycle, refer to C0H command

Table of ID Definitions:

XT25Q16D

Operation Code	M7-M0	ID15-ID8	ID7-ID0
9FH	0B	60	15
90H	0B		14
ABH			14

5.1. Basic Setting

5.1.1. Enable QPI(38H)

The device support both Standard/Dual/Quad SPI and QPI mode. The “Enable QPI (38H)” command can switch the device from SPI mode to QPI mode. See the command Table 2a for all support QPI commands. In order to switch the device to QPI mode, the Quad Enable (QE) bit in Status Register-1 must be set to 1 first, and “Enable QPI (38H)” command must be issued. If the QE bit is 0, the “Enable QPI (38H)” command will be ignored and the device will remain in SPI mode. When the device is switched from SPI mode to QPI mode, the existing Write Enable Latch and the Wrap Length setting will remain unchanged.

Figure 2. Enable QPI mode command Sequence Diagram

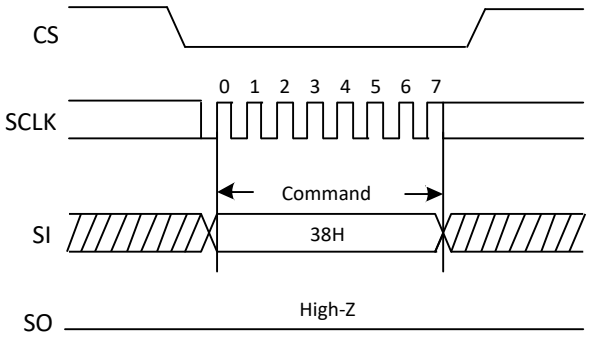

5.1.2. Write Enable(06H)

The Write Enable (WREN) command is for setting the Write Enable Latch (WEL) bit. The Write Enable Latch (WEL) bit must be set prior to every Page Program (PP), Sector Erase (SE), Block Erase (BE), Chip Erase (CE), Program Security Register, Erase Security Register and Write Status Register (WRSR) command. The Write Enable (WREN) command sequence: CS# goes low -> Sending the Write Enable command -> CS# goes high.

Figure 3.Write Enable Sequence Diagram

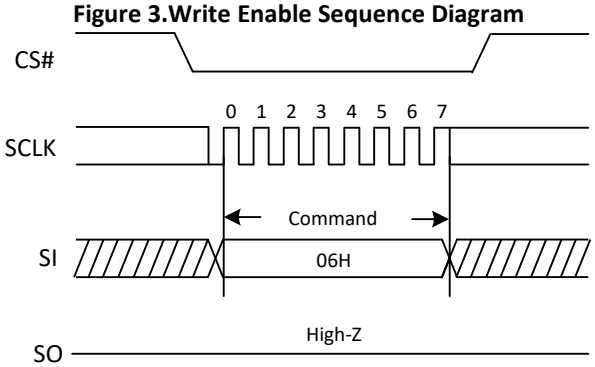

Figure 3a. Write Enable Sequence Diagram (QPI)

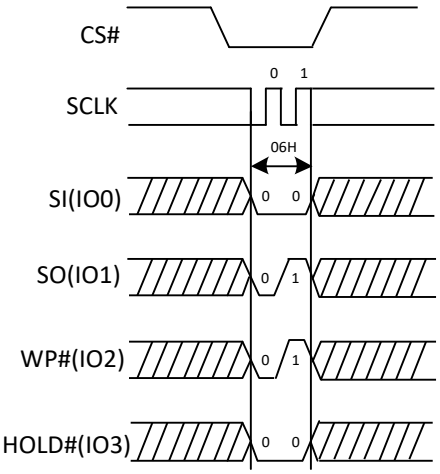

5.1.3. Write Enable for Volatile Status Register (50H)

The non-volatile Status Register bits can also be written to as volatile bits. This gives more flexibility to change the system configuration and memory protection schemes quickly without waiting for the typical non-volatile bit write cycles or affecting the endurance of the Status Register non-volatile bits. The Write Enable for Volatile Status Register command must be issued prior to a Write Status Register command and any other commands can't be inserted between them. Otherwise, Write Enable for Volatile Status Register will be cleared. The Write Enable for Volatile Status Register command will not set the Write Enable Latch bit, it is only valid for the Write Status Register command to change the volatile Status Register bit values.

Figure 4.Write Enable for Volatile Status Register Sequence Diagram

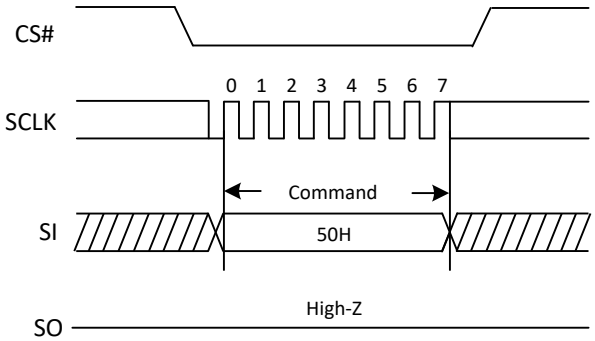

Figure 4a. Write Enable for Volatile Status Register Sequence Diagram (QPI)

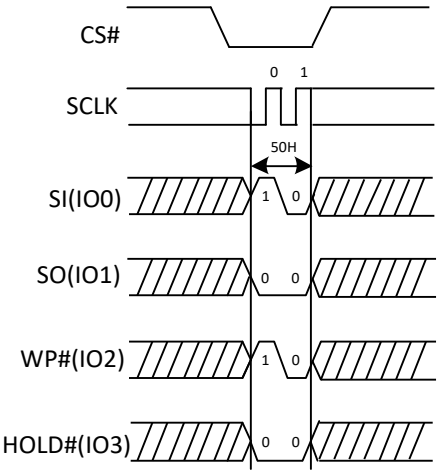

5.1.4. Write Disable(04H)

The Write Disable command is for resetting the Write Enable Latch (WEL) bit. The Write Disable command sequence: CS# goes low ->Sending the Write Disable command ->CS# goes high. The WEL bit is reset by following condition: Power-up and upon completion of the Write Status Register, Page Program, Sector Erase, Block Erase and Chip Erase commands.

Figure 5. Write Disable Sequence Diagram

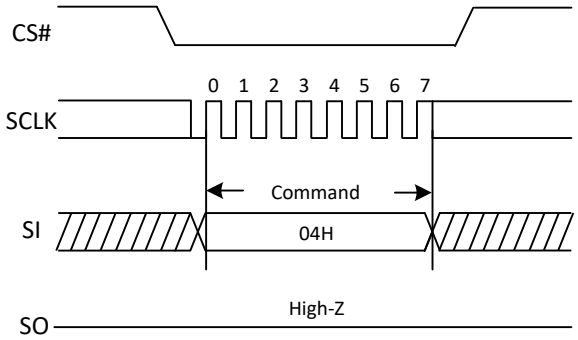

Figure 5a. Write Disable Sequence Diagram (QPI)

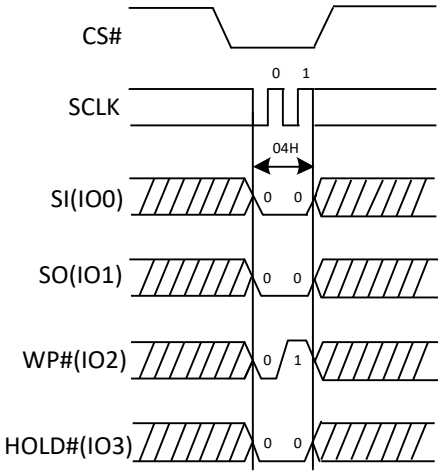

5.1.5. Continuous Read Mode Reset / Disable QPI (FFH)

The Dual/Quad I/O Fast Read operations, “Continuous Read Mode” bits (M7-0) are implemented to further reduce command overhead. By setting the (M7-0) to “AXH”, the next Dual/Quad I/O Fast Read operations do not require the BBH/EBH/E7H/BDH/EDH command code. Because the device has no hardware reset pin, so if Continuous Read Mode bits are set to “AXH”, the device will not recognize any standard SPI commands. So Continuous Read Mode Reset command will release the Continuous Read Mode from the “AXH” state and allow standard SPI command to be recognized.

Figure 6. Continuous Read Mode Reset Sequence Diagram

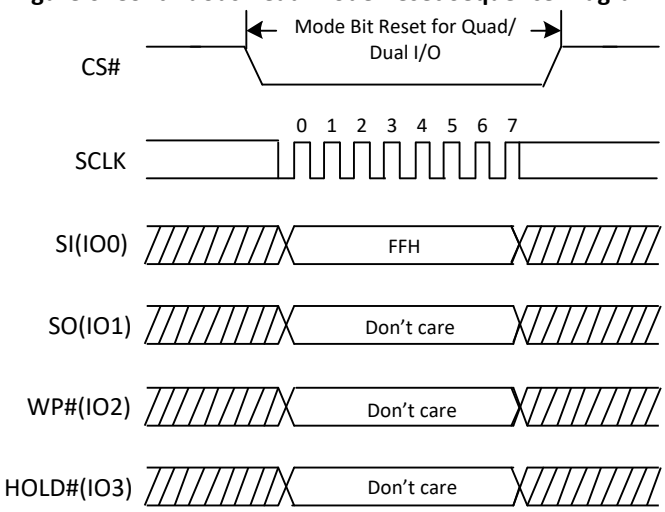

Disable QPI (FFH)

To exit the QPI mode and return to Standard/Dual/Quad SPI mode, the “Disable QPI (FFH)” command must be issued. When the device is switched from QPI mode to SPI mode, the existing Write Enable Latch and the Wrap Length setting will remain unchanged. When the device is in QPI mode, the first FFH command will exit continuous read mode and the second FFH command will exit QPI mode.

Figure 6a. Disable QPI mode command Sequence Diagram

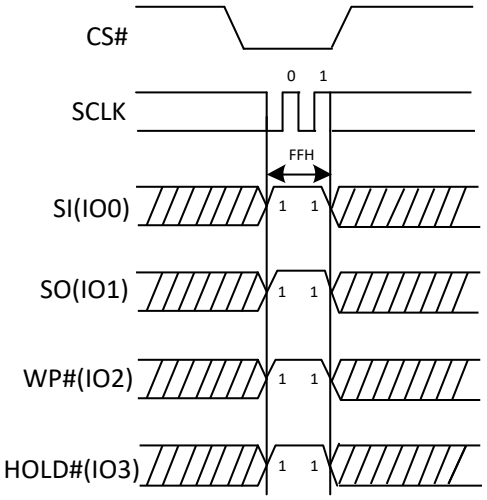

5.2. Memory Read

5.2.1. Normal Read (03H)

The Read Data Bytes (READ) command is followed by a 3-byte address (A23-A0), each bit being latched-in during the rising edge of SCLK. Then the memory content, at that address, is shifted out on SO, each bit being shifted out, at a Max frequency fR, during the falling edge of SCLK. The first byte addressed can be at any location. The address is automatically incremented to the next address after each byte of data is shifted out. The whole memory can, therefore, be read with a single Read Data Bytes (READ) command. Any Read Data Bytes (READ) command, while an Erase, Program or Write cycle is in progress, is rejected without having any effects on the cycle that is in progress.

Figure 7.Read Data Bytes Sequence Diagram

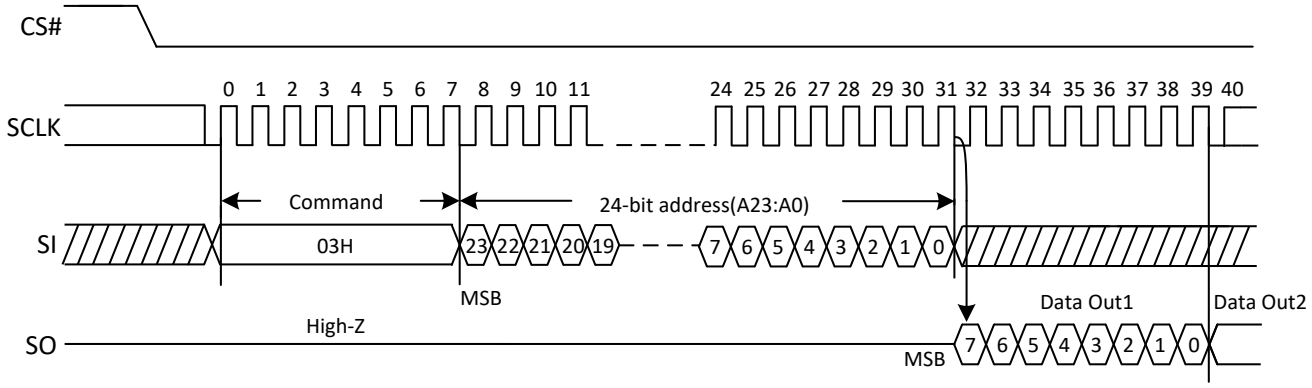

5.2.2. Fast Read (0BH)

The Read Data Bytes at Higher Speed (Fast Read) command is for quickly reading data out. It is followed by a 3-byte address (A23-A0) and a dummy byte, each bit being latched-in during the rising edge of SCLK. Then the memory content, at that address, is shifted out on SO, each bit being shifted out, at a Max frequency fC, during the falling edge of SCLK. The first byte addressed can be at any location. The address is automatically incremented to the next address after each byte of data is shifted out.

Figure 8. Read Data By test Higher Speed Sequence Diagram

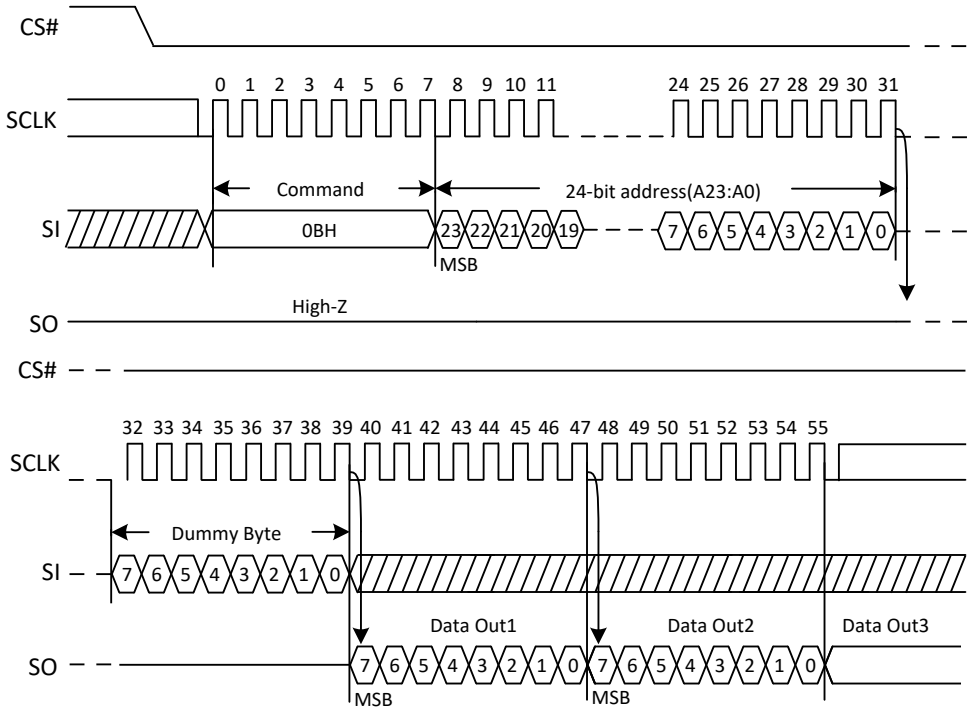

Fast Read (0BH) in QPI mode

The Fast Read command is also supported in QPI mode. In QPI mode, the number of dummy clocks is configured by the "Set Read Parameters (C0H)" command to accommodate a wide range application with different needs for either maximum Fast Read frequency or minimum data access latency. Depending on the Read Parameter Bits P[5:4] setting, the number of dummy clocks can be configured as either 4/6/8.

Figure 8a. Read Data Bytes at Higher Speed Sequence Diagram (QPI)

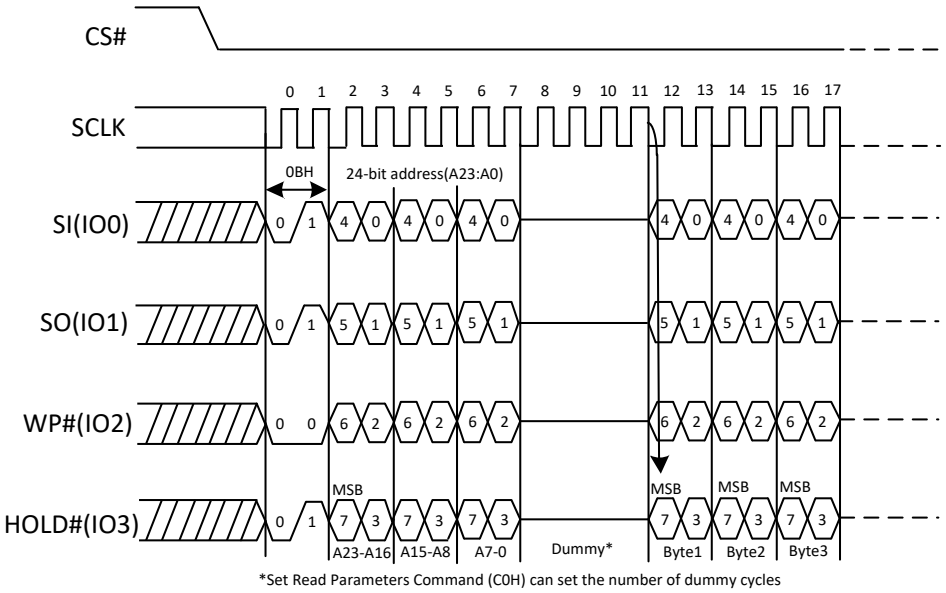

5.2.3. Dual Output Fast Read (3BH)

The Dual Output Fast Read command is followed by 3-byte address (A23-A0) and a dummy byte, each bit being latched in during the rising edge of SCLK, then the memory contents are shifted out 2-bit per clock cycle from SI and SO. The command sequence is shown in the following figure. The first byte addressed can be at any location. The address is automatically incremented to the next address after each byte of data is shifted out.

Figure 9. Dual Output Fast Read Sequence Diagram

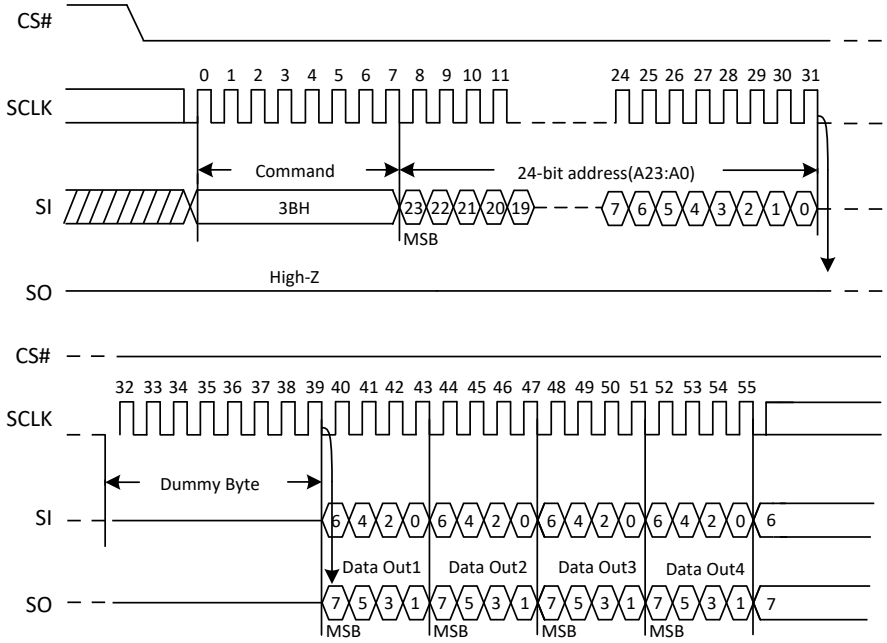

5.2.4. Dual I/O Fast Read(BBH)

The Dual I/O Fast Read command is similar to the Dual Output Fast Read command but with the capability to input the 3-byte address (A23-0) and a "Continuous Read Mode" byte 2-bit per clock by SI and SO, each bit being latched in during the rising edge of SCLK, then the memory contents are shifted out 2-bit per clock cycle from SI and SO. The command sequence is shown in the following figure. The first byte addressed can be at any location. The address is automatically incremented to the next address after each byte of data is shifted out.

Figure 10. Dual I/O Fast Read Sequence Diagram (M5-4≠(1,0))

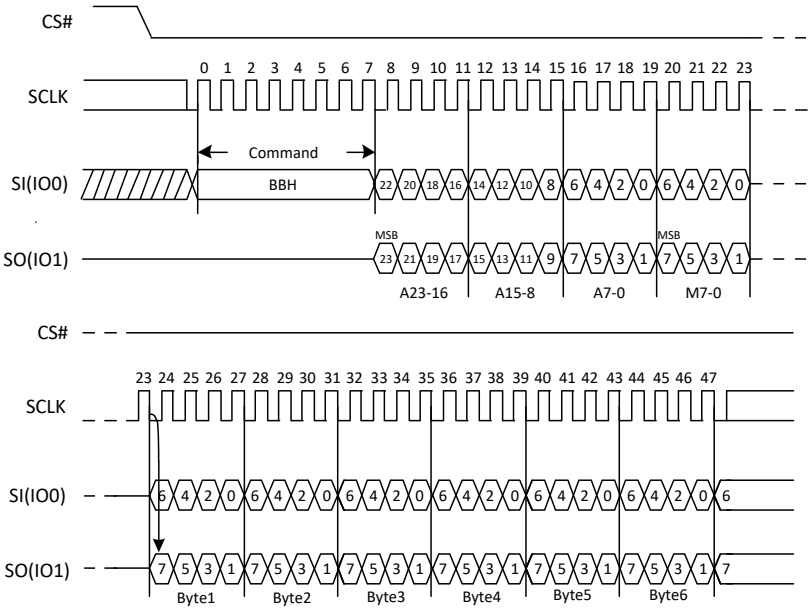

Dual I/O Fast Read with "Continuous Read Mode"

The Dual I/O Fast Read command can further reduce command overhead through setting the "Continuous Read Mode" bits (M7-0) after the input 3-byte address (A23-A0). If the "Continuous Read Mode" bits (M5- 4) =(1, 0), then the next Dual I/O Fast Read command (after CS# is raised and then lowered) does not require the BBH command code. The command sequence is shown in Figure11. If the "Continuous Read Mode" bits (M5- 4) do not equal (1, 0), the next command requires the first BBH command code, thus returning to normal operation. A "Continuous Read Mode" Reset command can be used to reset (M5- 4) before issuing normal command.

Figure 11. Dual I/O Fast Read Sequence Diagram (M5-4=(1,0))

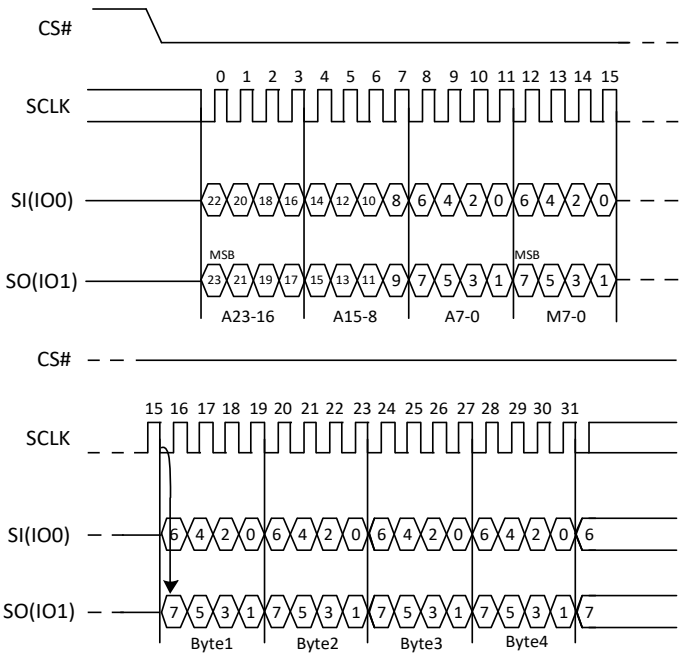

5.2.5. Quad Output Fast Read(6BH)

The Quad Output Fast Read command is followed by 3-byte address (A23-A0) and a dummy byte, each bit being latched in during the rising edge of SCLK, then the memory contents are shifted out 4-bit per clock cycle from IO3, IO2, IO1 and IO0. The command sequence is shown in Figure13. The first byte addressed can be at any location. The address is automatically incremented to the next address after each byte of data is shifted out.

Figure 13. Quad Output Fast Read Sequence Diagram

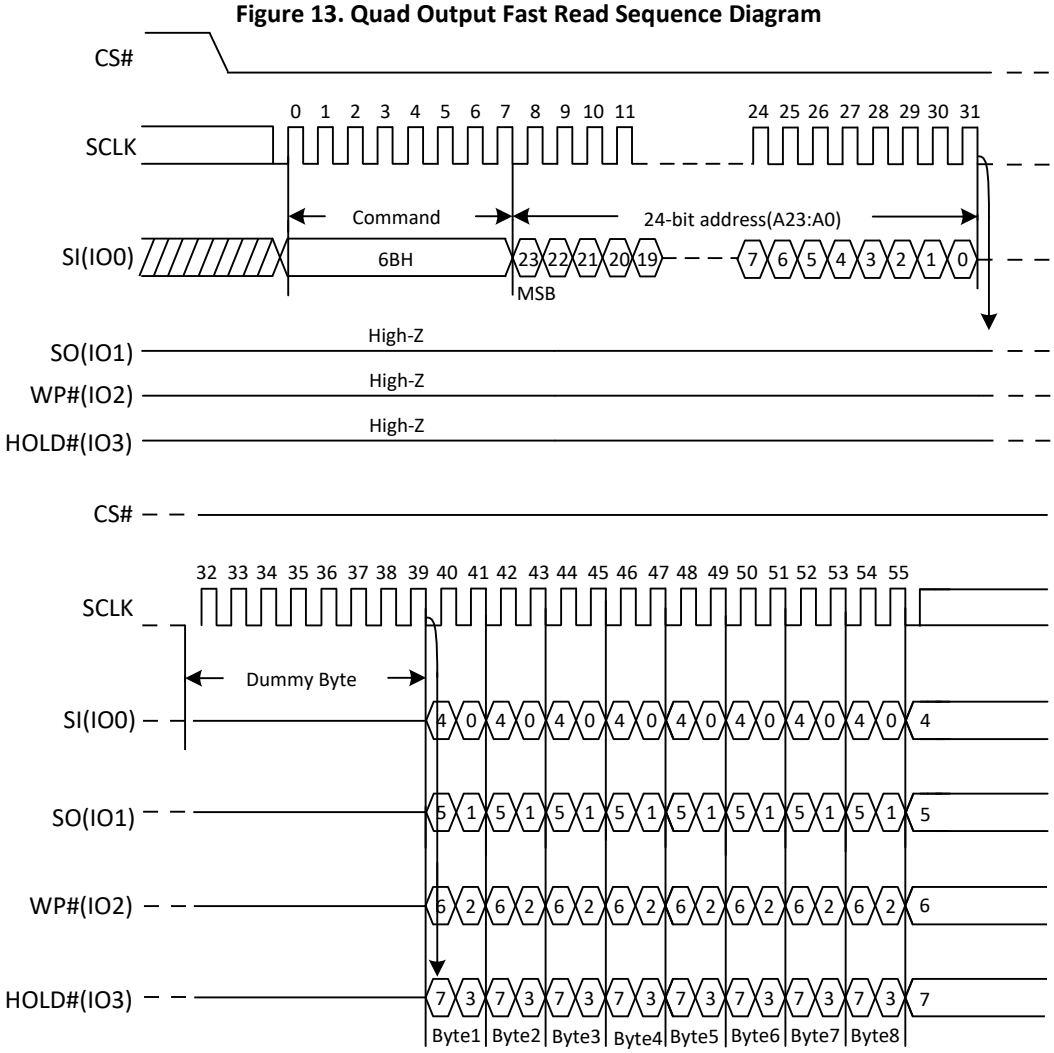

5.2.6. Quad I/O Fast Read(EBH)

The Quad I/O Fast Read command is similar to the Dual I/O Fast Read command but with the capability to input the 3-byte address (A23-0) and a "Continuous Read Mode" byte and 4 dummy clock 4-bit per clock by IO0, IO1, IO3, IO4, each bit being latched in during the rising edge of SCLK, then the memory contents are shifted out 4-bit per clock cycle from IO0, IO1, IO2, IO3. The command sequence is shown in the figure below. The first byte addressed can be at any location. The address is automatically incremented to the next address after each byte of data is shifted out. The Quad Enable bit (QE) of Status Register (S9) must be set to enable for the Quad I/O Fast read command.

Figure 12. Quad I/O Fast Read Sequence Diagram (M5-4≠(1,0))

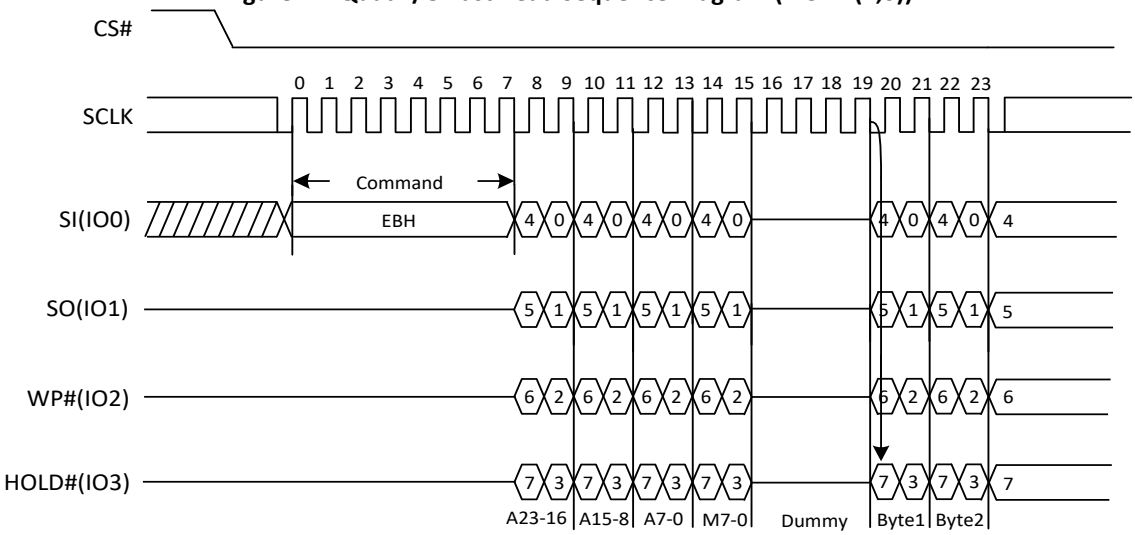

Quad I/O Fast Read with "Continuous Read Mode"

The Quad I/O Fast Read command can further reduce command overhead through setting the "Continuous Read Mode" bits (M7-0) after the input 3-byte address (A23-A0). If the "Continuous Read Mode" bits (M5-4) =(1, 0), then the next Quad I/O Fast Read command (after CS# is raised and then lowered) does not require the EBH command code. The command sequence is shown in Figure12a. If the "Continuous Read Mode" (M5- 4) do not equal (1, 0), the next command requires the first EBH command code, thus returning to normal operation. A "Continuous Read Mode" Reset command can be used to reset (M5- 4) before issuing normal command.

Figure 12a. Quad I/O Fast Read Sequence Diagram (M5-4=(1,0))

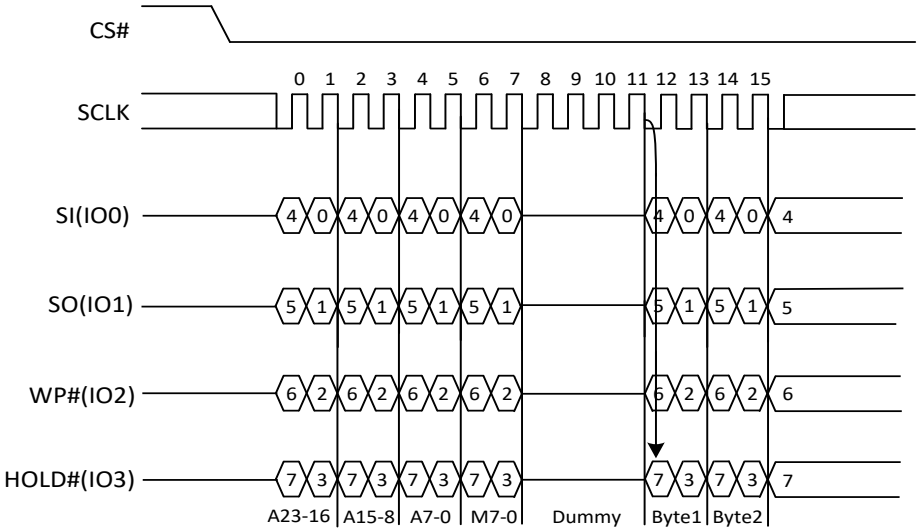

Quad I/O Fast Read with "8/16/32/64-Byte Wrap Around" in Standard SPI mode

The Quad I/O Fast Read command can be used to access a specific portion within a page by issuing "Set Burst with Wrap" (77H) commands prior to EBH. The "Set Burst with Wrap" (77H) command can either enable or disable the "Wrap Around" feature for the following EBH commands. When "Wrap Around" is enabled, the data being accessed can be limited to either an 8/16/32/64-byte section of a 256-byte page. The output data starts at the initial address specified in the command, once it reaches the ending boundary of the 8/16/32/64-byte section, the output will wrap around the beginning boundary automatically until CS# is pulled high to terminate the command.
The Burst with Wrap feature allows applications that use cache to quickly fetch a critical address and then fill the cache afterwards within a fixed length (8/16/32/64-byte) of data without issuing multiple read commands.

Quad I/O Fast Read (EBH) in QPI mode

The Quad I/O Fast Read command is also supported in QPI mode. See the figure below. In QPI mode, the number of dummy clocks is configured by the "Set Read Parameters (C0H)" command to accommodate a wide range application with different needs for either maximum Fast Read frequency or minimum data access latency. Depending on the Read Parameter Bits P[5:4] setting, the number of dummy clocks can be configured as either 4/6/8. In QPI mode, the "Continuous Read Mode" bits M7-M0 are also considered as dummy clocks. "Continuous Read Mode" feature is also available in QPI mode for Quad I/O Fast Read command. "Wrap Around" feature is not available in QPI mode for Quad I/O Fast Read command. To perform a read operation with fixed data length wrap around in QPI mode, a dedicated "Burst Read with Wrap" (0CH) command must be used.

Figure 12b. Quad I/O Fast Read Sequence Diagram (M5-4= (1, 0) QPI)

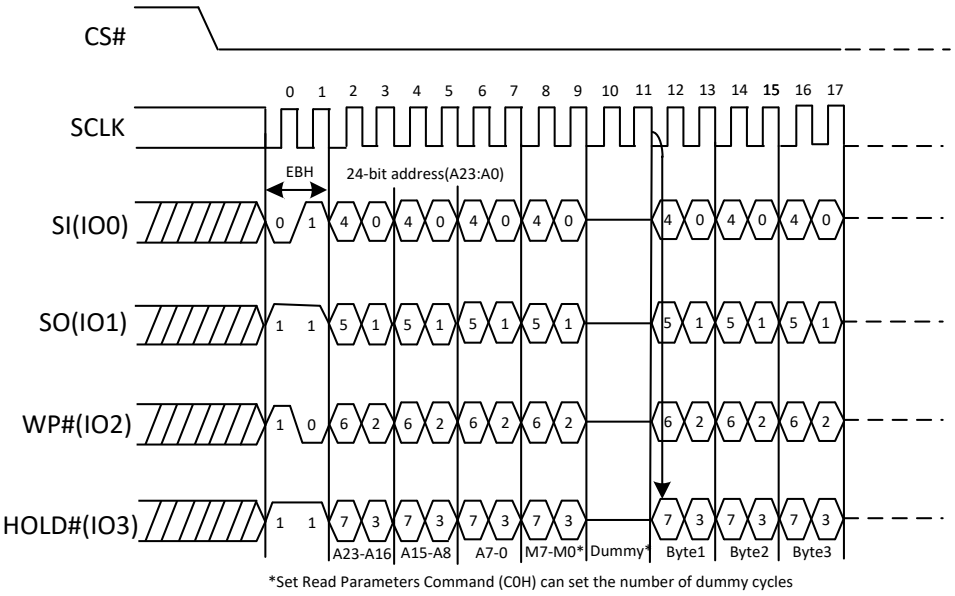

5.2.7. Quad I/O Word Fast Read(E7H)

The Quad I/O Word Fast Read command is similar to the Quad I/O Fast Read command except that the lowest address bit (A0) must equal 0 and only 2 dummy clock. The command sequence is shown in followed Figure14. The first byte addressed can be at any location. The address is automatically incremented to the next address after each byte of data is shifted out. The Quad Enable bit (QE) of Status Register (S9) must be set to enable for the Quad I/O Word Fast read command.

Figure 14. Quad I/O Word Fast Read Sequence Diagram (M5-4≠(1,0))

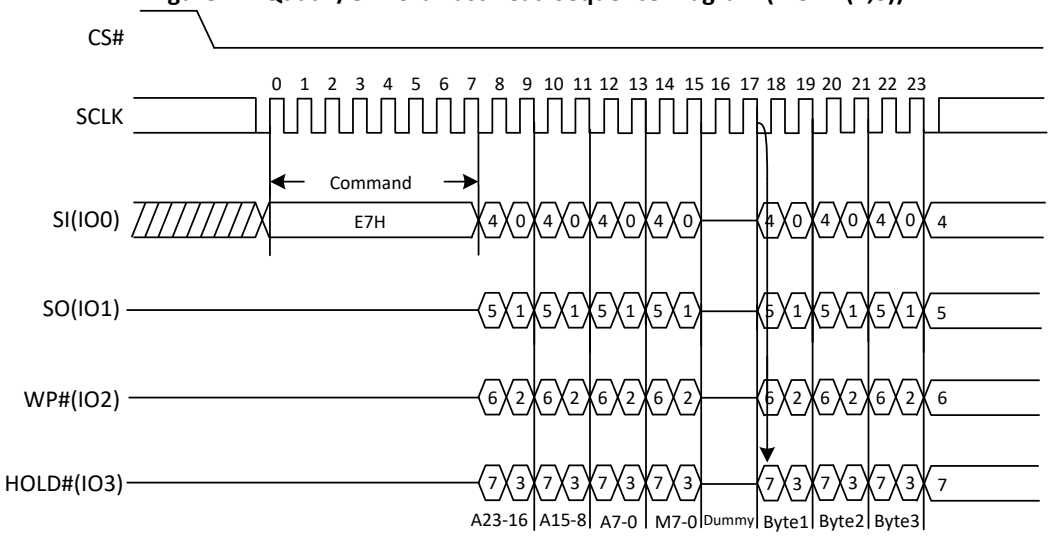

Quad I/O Word Fast Read with "Continuous Read Mode"

The Quad I/O Word Fast Read command can further reduce command overhead through setting the "Continuous Read Mode" bits (M7-0) after the input 3-byte address (A23-A0). If the "Continuous Read Mode" bits (M5- 4) = (1, 0), then the next Quad I/O Word Fast Read command (after CS# is raised and then lowered) does not require the E7H command code. The command sequence is shown in Figure14a. If the "Continuous Read Mode" bits (M5- 4) do not equal (1, 0), the next command requires the first E7H command code, thus returning to normal operation. A "Continuous Read Mode Reset" command can be used to reset (M7-0) before issuing normal command.

Figure 14a. Quad I/O Word Fast Read Sequence Diagram (M5-4=(1,0))

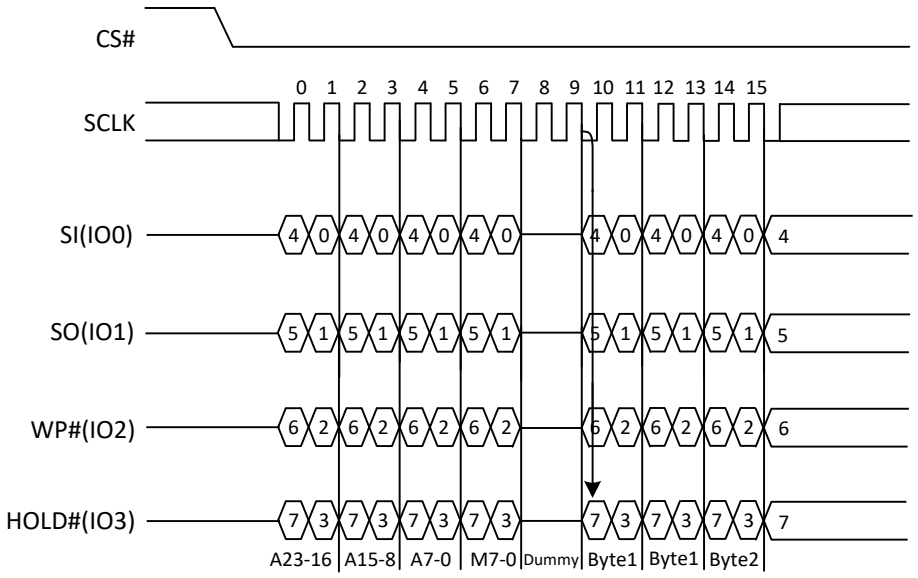

Quad I/O Word Fast Read with "8/16/32/64-Byte Wrap Around" in Standard SPI mode

The Quad I/O Word Fast Read command can be used to access a specific portion within a page by issuing "Set Burst with Wrap" (77H) commands prior to E7H. The "Set Burst with Wrap" (77H) command can either enable or disable the "Wrap Around" feature for the following E7H commands. When "Wrap Around" is enabled, the data being accessed can be limited to either an 8/16/32/64-byte section of a 256-byte page. The output data starts at the initial address specified in the command, once it reaches the ending boundary of the 8/16/32/64-byte section, the output will wrap around the beginning boundary automatically until CS# is pulled high to terminate the command. The Burst with Wrap feature allows applications that use cache to quickly fetch a critical address and then fill the cache afterwards within a fixed length (8/16/32/64-byte) of data without issuing multiple read commands.

5.3. Read Under DTR

5.3.1. DTR Fast Read (0DH)

The DTR Fast Read instruction is similar to the Fast Read instruction except that the 24-bit address input and the data output require DTR (Double Transfer Rate) operation. This is accomplished by adding six dummy clocks after the 24-bit address as shown in Figure 15. The dummy clocks allow the devices internal circuits additional time for setting up the initial address. During the dummy clocks the data value on the SO pin is a “don’t care”.

Figure 15. DTR Fast Read Instruction(SPI Mode)

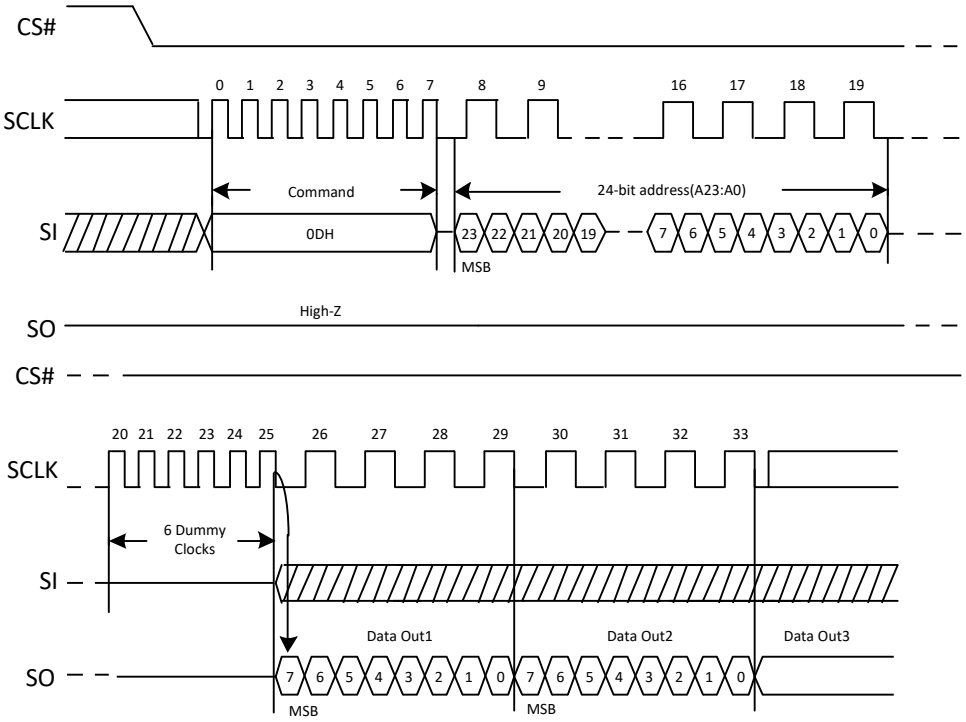

DTR Fast Read (0DH) in QPI Mode

The DTR Fast Read instruction is also supported in QPI mode.

The number of dummy clocks for “DTR Fast Read” (0DH) under QPI mode and “DTR Fast Read Quad I/O” (EDH) can be set by the Latency Code (LC) in status register. When the LC bit is set to 0, which is default, the number of dummy clock cycles is 8. When the LC bit is set to 1, the dummy clock cycles is 6.

Figure 15a. DTR Fast Read Instruction(QPI Mode)

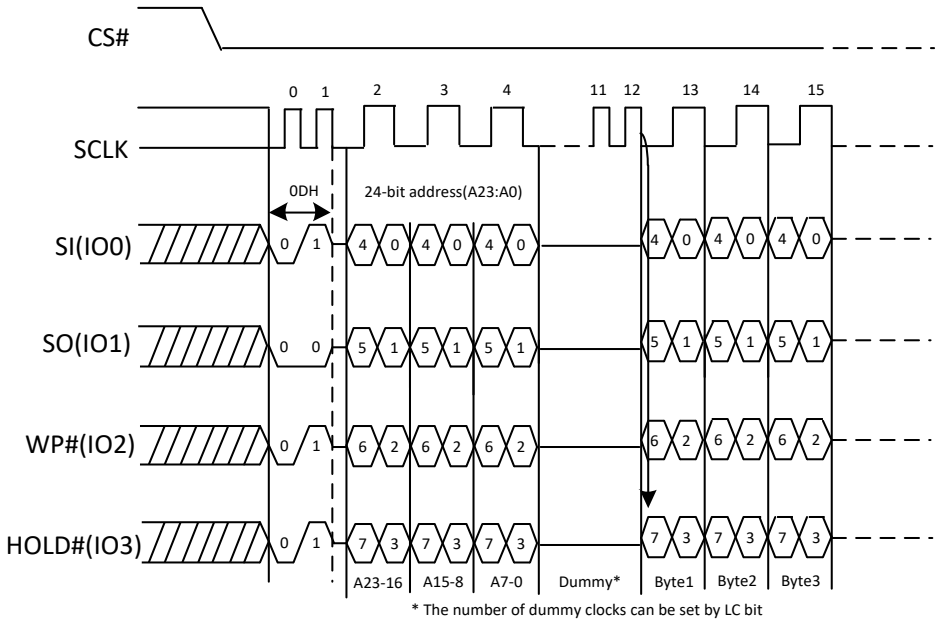

5.3.2. DTR Fast Read Dual I/O (BDH)

The DTR Fast Read Dual I/O (BDh) instruction allows for improved random access while maintaining two IO pins, IO0 and IO1. It is similar to the Fast Read Dual Output (3Bh) instruction but with the capability to input the Address bits (A23-0) two bits per clock. Six dummy clocks(including M7-0) will follow the 24-bit address. The dummy clocks allow the devices internal circuits additional time for setting up the initial address. During the dummy clocks the data value on the SO pin is a "don't care".

This reduced instruction overhead may allow for code execution (XIP) directly from the Dual SPI in some applications.

Figure 16. DTR Fast Read Dual I/O(Initial instruction or previous M5-4≠10，SPI Mode only)

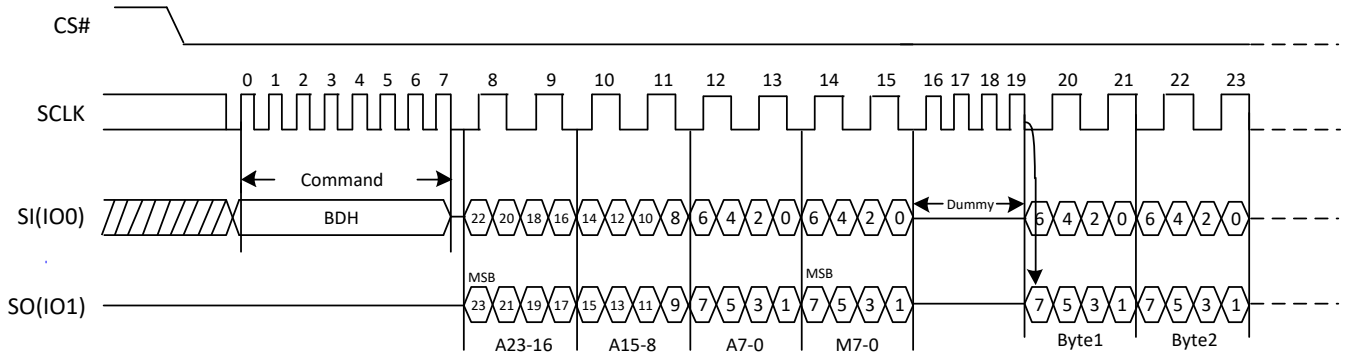

DTR Fast Read Dual I/O with "Continuous Read Mode"

The DTR Fast Read Dual I/O instruction can further reduce instruction overhead through setting the "Continuous Read Mode" bits (M7-0) after the input Address bits (A23-0), as shown in "3BH" command description. The upper nibble of the (M7-4) controls the length of the next Fast Read Dual I/O instruction through the inclusion or exclusion of the first byte instruction code. The lower nibble bits of the (M3-0) are don't care ("x"). However, the IO pins should be high-impedance prior to the falling edge of the first data out clock.

If the "Continuous Read Mode" bits M5-4 = (1,0), then the next DTR Fast Read Dual I/O instruction (after /CS is raised and then lowered) does not require the BDh instruction code, as shown in Figure 16a. This reduces the instruction sequence by eight clocks and allows the Read address to be immediately entered after /CS is asserted low. If the "Continuous Read Mode" bits M5-4 do not equal to (1,0), the next instruction (after /CS is raised and then lowered) requires the first byte instruction code, thus returning to normal operation. It is recommended to input FFFFh/FFFFFh on IO0 (lasting 16 or 20 clocks) for the next instruction to ensure M4 = 1 and return the device to normal operation.

Figure 16a. DTR Fast Read Dual I/O (Previous instruction set M5-4=10, SPI Mode only)

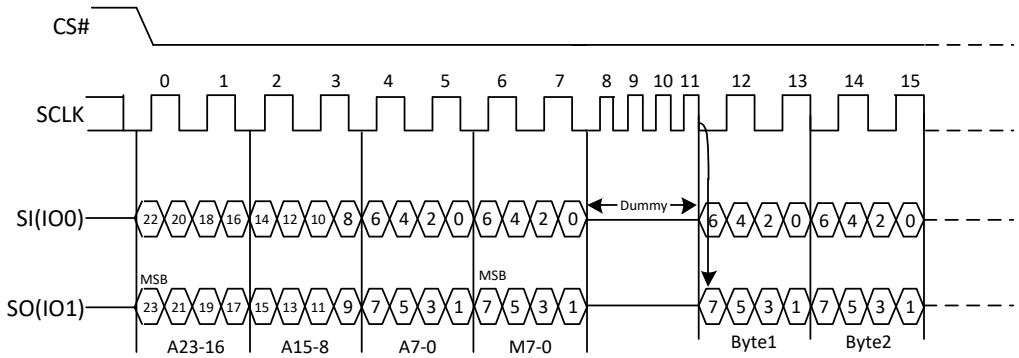

5.3.3. DTR Fast Read Quad I/O (EDH)

The DTR Fast Read Quad I/O (EDh) instruction is similar to the Fast Read Dual I/O (BBh) instruction except that address and data bits are input and output through four pins IO0, IO1, IO2 and IO3 and several Dummy clocks(including M7-M0) are required in SPI mode prior to the data output. The Quad I/O dramatically reduces instruction overhead allowing faster random access for code execution (XIP) directly from the Quad SPI. The

Quad Enable bit (QE) of Status Register-2 must be set to enable the DTR Fast Read Quad I/O Instruction.

The number of dummy clocks for "DTR Fast Read" (0DH) under QPI mode and "DTR Fast Read Quad I/O" (EDH) can be set by the Latency Code (LC) in status register. When the LC bit is set to 0, which is default, the number of dummy clock cycles is 8. When the LC bit is set to 1, the dummy clock cycles is 6.

DTR Fast Read Quad I/O with "Continuous Read Mode"

The DTR Fast Read Quad I/O instruction can further reduce instruction overhead through setting the "Continuous Read Mode" bits (M7-0) after the input Address bits (A23 -0), as shown in "6BH" command description. The upper nibble of the (M7-4) controls the length of the next Fast Read Quad I/O instruction through the inclusion or exclusion of the first byte instruction code. The lower nibble bits of the (M3-0) are don't care ("x"). However, the IO pins should be high-impedance prior to the falling edge of the first data out clock.

If the "Continuous Read Mode" bits M5-4 = (1,0), then the next DTR Fast Read Quad I/O instruction (after /CS is raised and then lowered) does not require the EBh instruction code. This reduces the instruction sequence by eight clocks and allows the Read address to be immediately entered after /CS is asserted low. If the "Continuous Read Mode" bits M5-4 do not equal to (1,0), the next instruction (after /CS is raised and then lowered) requires the first byte instruction code, thus returning to normal operation. It is recommended to input FFh/3FFh on IO0 for the next instruction (8/10 clocks), to ensure M4 = 1 and return the device to normal operation.

Figure 17. DTR Fast Read Quad I/O (Initial instruction or previous M5-4≠10，SPI Mode)

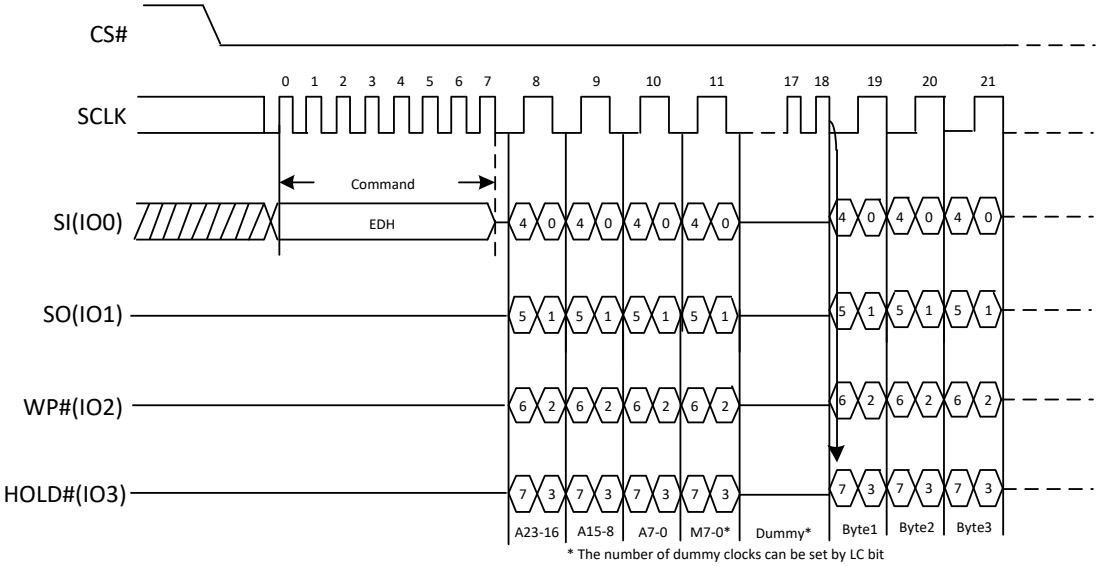

Figure 17a. Fast Read Quad I/O (Previous instruction set M5-4=10，SPI Mode)

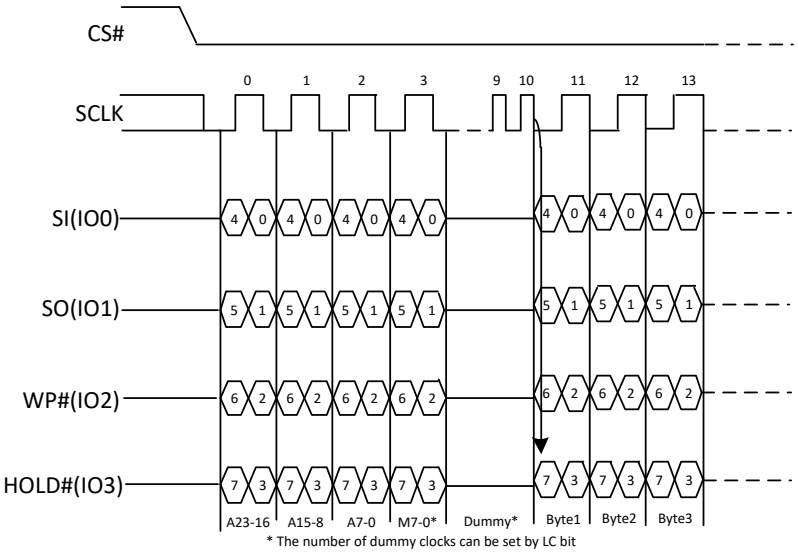

DTR Fast Read Quad I/O with "8/16/32/64-Byte Wrap Around" in Standard SPI mode

The DTR Fast Read Quad I/O instruction can also be used to access a specific portion within a page by issuing a "Set Burst with Wrap" (77h) command prior to EDh. The "Set Burst with Wrap" (77h) command can either enable or disable the "Wrap Around" feature for the following EDh commands. When "Wrap Around" is enabled, the data being accessed can be limited to either an 8, 16, 32 or 64-byte section of a 256-byte page. The output data starts at the initial address specified in the instruction, once it reaches the ending boundary of the 8/16/32/64-byte section, the output will wrap around to the beginning boundary automatically until /CS is pulled high to terminate the command.

The Burst with Wrap feature allows applications that use cache to quickly fetch a critical address and then fill the cache afterwards within a fixed length (8/16/32/64-byte) of data without issuing multiple read commands.

DTR Fast Read Quad I/O (EDh) in QPI Mode

The DTR Fast Read Quad I/O instruction is also supported in QPI mode, as shown in Figure 17b. In QPI mode, the "Continuous Read Mode" bits M7-0 are also considered as dummy clocks. In the default setting, the data output will follow the Continuous Read Mode bits immediately.

"Continuous Read Mode" feature is also available in QPI mode for Fast Read Quad I/O instruction. Please refer to the description on previous pages.

"Wrap Around" feature is not available in QPI mode for DTR Fast Read Quad I/O instruction. To perform a read operation with fixed data length wrap around in QPI mode, a dedicated "Burst Read with Wrap" (0Ch) instruction must be used. Please refer to C0H command for details.

Figure 17b. DTR Fast Read Quad I/O (Initial instruction or previous M5-4≠10, QPI Mode)

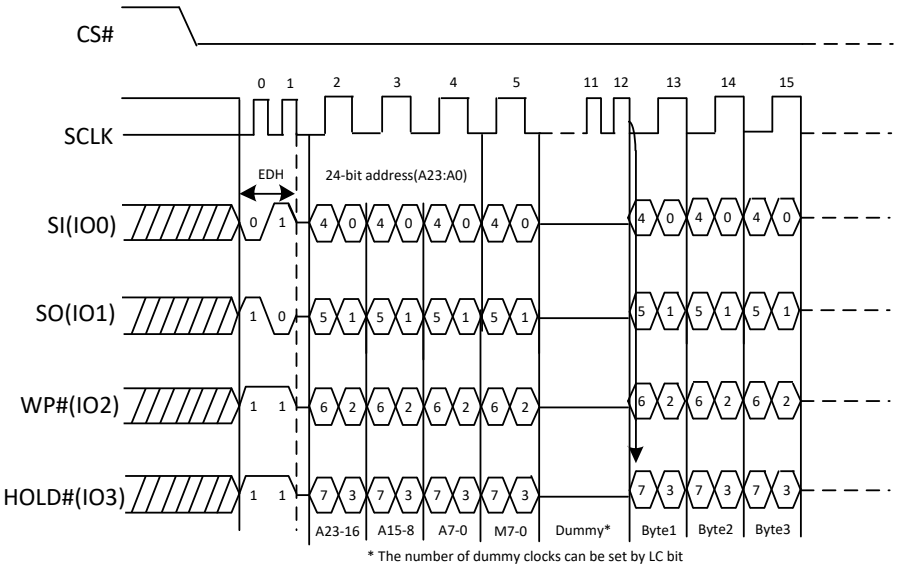

5.4. Memory Program

5.4.1. Page Program(02H)

The Page Program (PP) command is for programming the memory. A Write Enable (WREN) command must previously have been executed to set the Write Enable Latch (WEL) bit before sending the Page Program command.

The Page Program (PP) command is entered by driving CS# Low, followed by the command code, three address bytes and at least one data byte on SI. If the 8 least significant address bits (A7-A0) are not all zero, all transmitted data that goes beyond the end of the current page are programmed from the start address of the same page (from the address whose 8 least significant bits (A7-A0) are all zero). CS# must be driven low for the entire duration of the sequence. The Page Program command sequence: CS# goes low →sending Page Program command→ 3-byte address on SI→ at least 1 byte data on SI →CS# goes high. The command sequence is shown in Figure18. If more than 256 bytes are sent to the device, previously latched data are discarded and the last 256 data bytes are guaranteed to be programmed correctly within the same page. If less than 256 data bytes are sent to device, they are correctly programmed at the requested addresses without having any effects on the other bytes of the same page. CS# must be driven high after the eighth bit of the last data byte has been latched in; otherwise the Page Program (PP) command is not executed.

As soon as CS# is driven high, the self-timed Page Program cycle (whose duration is tPP) is initiated. While the Page Program cycle is in progress, the Status Register may be read to check the value of the Write In Progress (WIP) bit. The Write In Progress (WIP) bit is 1 during the self-timed Page Program cycle, and is 0 when it is completed. At some unspecified time before the cycle is completed, the Write Enable Latch (WEL) bit is reset.

A Page Program (PP) command applied to a page which is protected by the Block Protect (BP4, BP3, BP2, BP1, BP0) is not executed.

Figure 18. Page Program Sequence Diagram

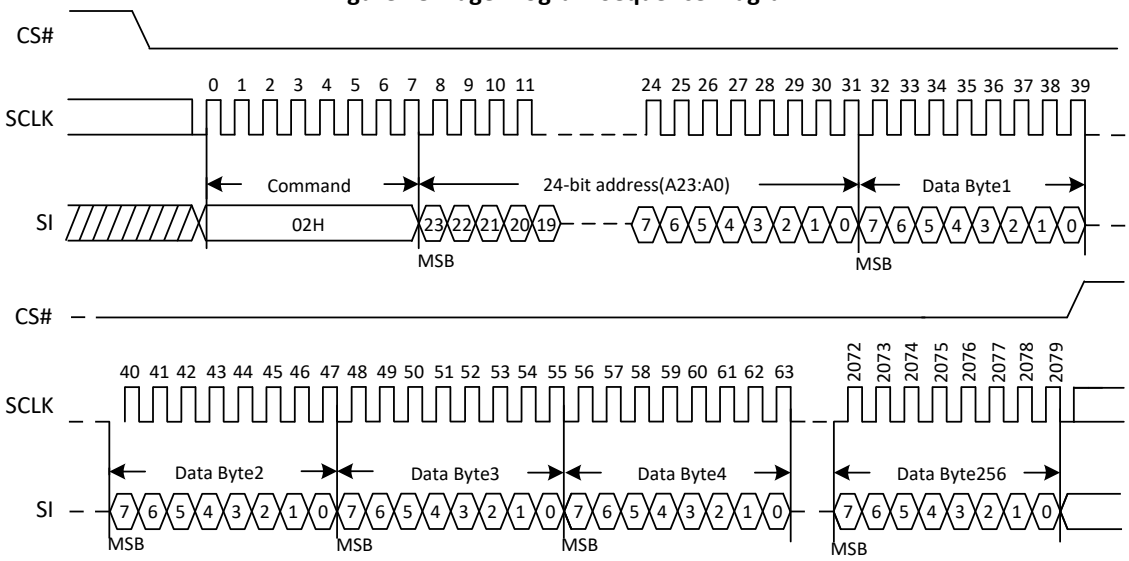

Figure18a. Page Program Sequence Diagram (QPI)

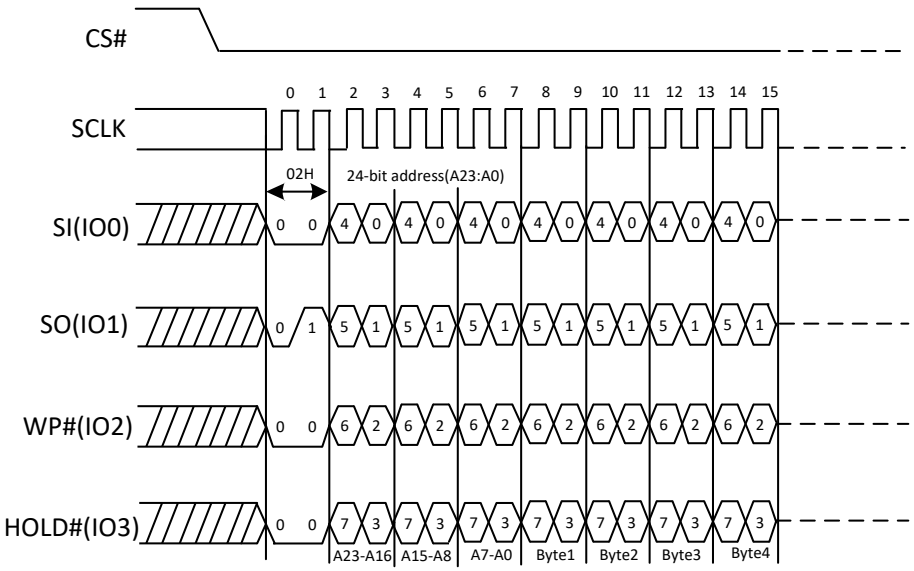

5.4.2. Quad Page Program(32H)

The Quad Page Program command is for programming the memory using four pins: IO0, IO1, IO2, and IO3. To use Quad Page Program, the Quad Enable bit in status register Bit9 must be set (QE=1). A Write Enable (WREN) command must previously have been executed to set the Write Enable Latch (WEL) bit before sending the Page Program command. The Quad Page Program command is entered by driving CS# Low, followed by the command code (32H), three address bytes and at least one data byte on IO pins.

The command sequence is shown in Figure 19. If the 8 least significant address bits (A7-A0) are not all zero, all transmitted data that goes beyond the end of the current page are programmed from the start address of the same page (from the address whose 8 least significant bits (A7-A0) are all zero). If more than 256 bytes are sent to the device, previously latched data are discarded and the last 256 data bytes are guaranteed to be programmed correctly within the same page. If less than 256 data bytes are sent to device, they are correctly programmed at the requested addresses without having any effects on the other bytes of the same page. CS# must be driven high after the eighth bit of the last data byte has been latched in; otherwise the Quad Page Program command will not be executed.

As soon as CS# is driven high, the self-timed Quad Page Program cycle (whose duration is tPP) is initiated. While the Quad Page Program cycle is in progress, the Status Register can be read to check the value of the Write In Progress (WIP) bit. The Write In Progress (WIP) bit is 1 during the self-timed Quad Page Program cycle, and is 0 when it is completed. At some unspecified time before the cycle is completed, the Write Enable Latch (WEL) bit is reset.

A Quad Page Program command applied to a page which is protected by the Block Protect (BP4, BP3, BP2, BP1, BP0) will not be executed.

Figure 19. Quad Page Program Sequence Diagram

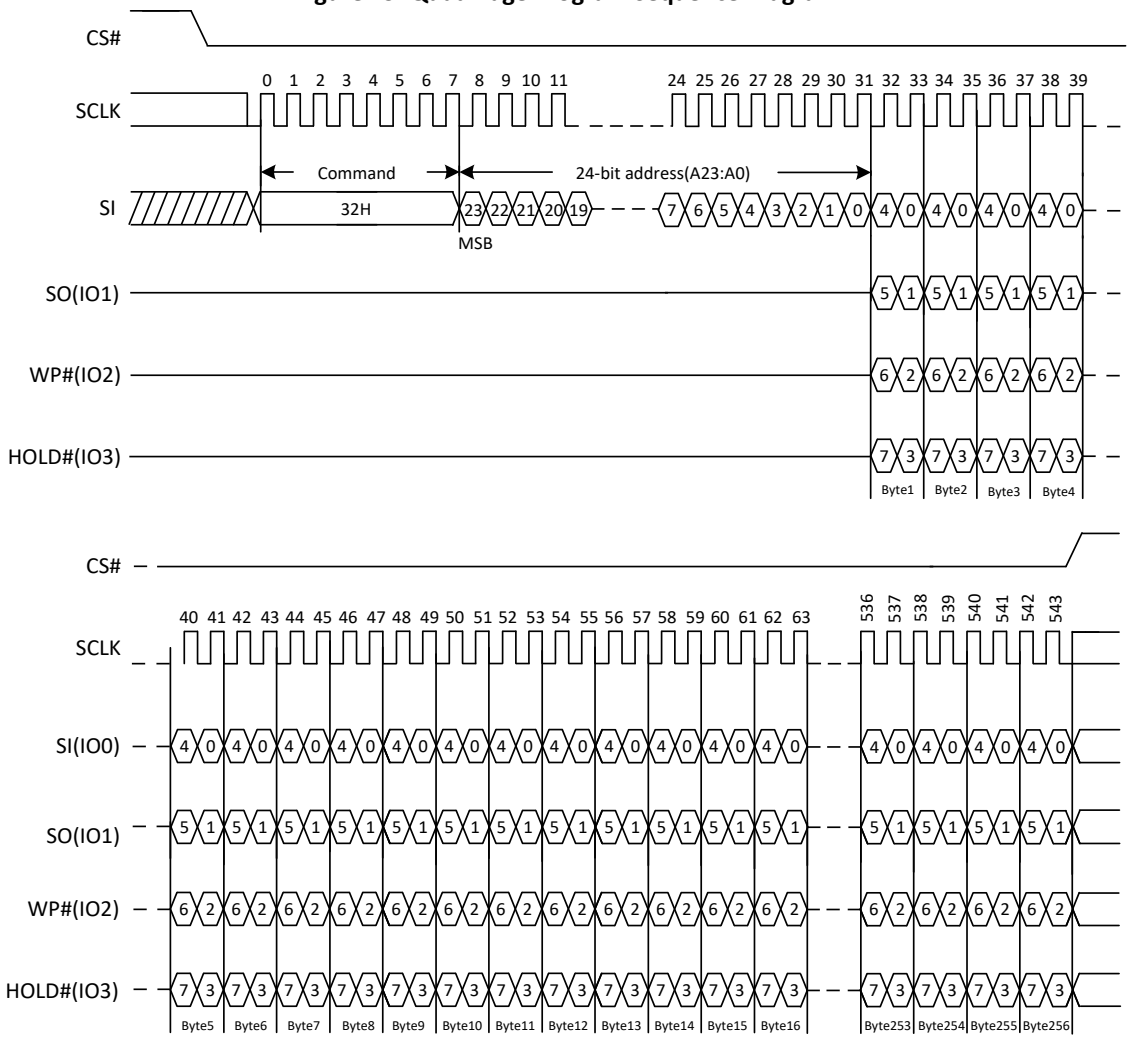

5.5. Memory Erase

5.5.1. Sector Erase(20H)

The Sector Erase (SE) command is for erasing all the data of the chosen sector. A Write Enable (WREN) command must previously have been executed to set the Write Enable Latch (WEL) bit before sending the Sector Erase command. The Sector Erase (SE) command is entered by driving CS# low, followed by the command code, and 3-address byte on SI. Any address inside the sector is a valid address for the Sector Erase (SE) command.

The Sector Erase command sequence: CS# goes low→ sending Sector Erase command→ 3-byte address on SI→ CS# goes high. The command sequence is shown in Figure 20. CS# must be driven high after the eighth bit of the last address byte has been latched in; otherwise the Sector Erase (SE) command will not be executed. As soon as CS# is driven high, the self-timed Sector Erase cycle (whose duration is tSE) is initiated. While the Sector Erase cycle is in progress, the Status Register can be read to check the value of the Write In Progress (WIP) bit. The Write In Progress (WIP) bit is 1 during the self-timed Sector Erase cycle, and is 0 when it is completed. At some unspecified time before the cycle is completed, the Write Enable Latch (WEL) bit is reset. A Sector Erase (SE) command applied to a sector which is protected by the Block Protect (BP4, BP3, BP2, BP1, BP0) bit (see Table 1.0 & 1.1) will not be executed.

Note: Power disruption during erase operation will cause incomplete erase, thus it is recommended to perform a re-erase once power resume.

Figure 20. Sector Erase Sequence Diagram

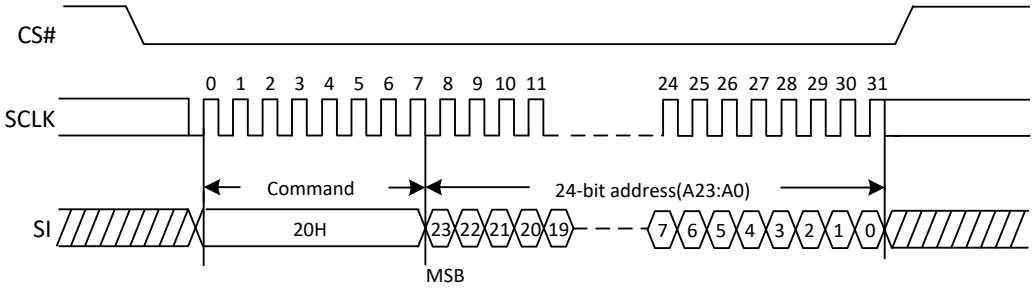

Figure 20a. Sector Erase Sequence Diagram (QPI)

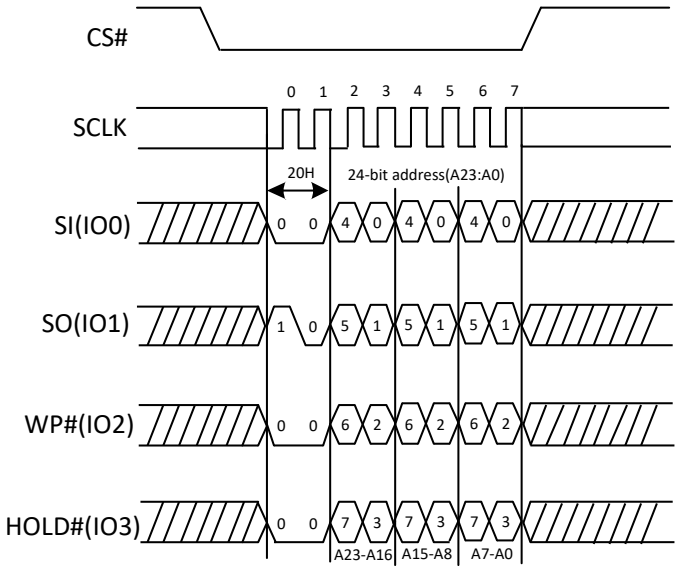

5.5.2. 32k Block Erase(52H)

The 32KB Block Erase (BE) command is for erasing all the data of the chosen block. A Write Enable (WREN) command must previously have been executed to set the Write Enable Latch (WEL) bit before sending the 32KB Block Erase command. The 32KB Block Erase (BE) command is entered by driving CS# low, followed by the command code, and three address bytes on SI, driving CS# high. Any address inside the block is a valid address for the 32KB Block Erase (BE) command.

The 32KB Block Erase command sequence: CS# goes low→ sending 32KB Block Erase command→ 3-byte address on SI→CS# goes high. The command sequence is shown in Figure 21. CS# must be driven high after the eighth bit of the last address byte has been latched in; otherwise the 32KB Block Erase (BE) command will not be executed. As soon as CS# is driven high, the self-timed Block Erase cycle (whose duration is tBE) is initiated. While the Block Erase cycle is in progress, the Status Register can be read to check the value of the Write In Progress (WIP) bit. The Write In Progress (WIP) bit is 1 during the self-timed Block Erase cycle, and is 0 when it is completed. At some unspecified time before the cycle is completed, the Write Enable Latch (WEL) bit is reset. A 32KB Block Erase (BE) command applied to a block which is protected by the Block Protect (BP4, BP3, BP2, BP1, BP0) bits (see Table 1.0 & 1.1) will not be executed.

Note: Power disruption during erase operation will cause incomplete erase, thus it is recommended to perform a re-erase once power resume.

Figure 21. 32KB Block Erase Sequence Diagram

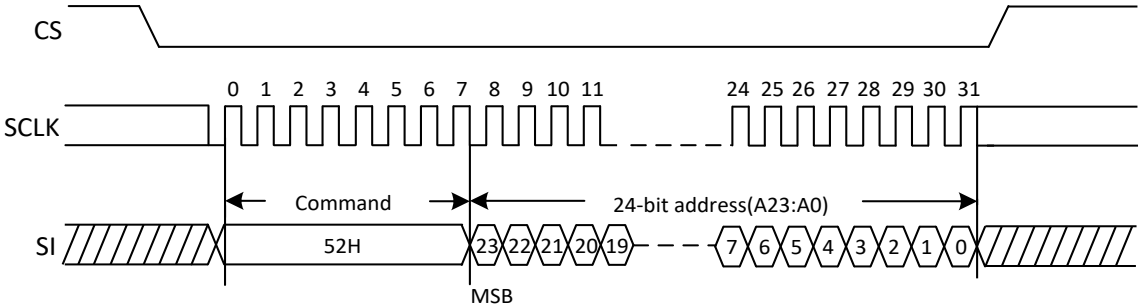

Figure 21a. 32KB Block Erase Sequence Diagram (QPI)

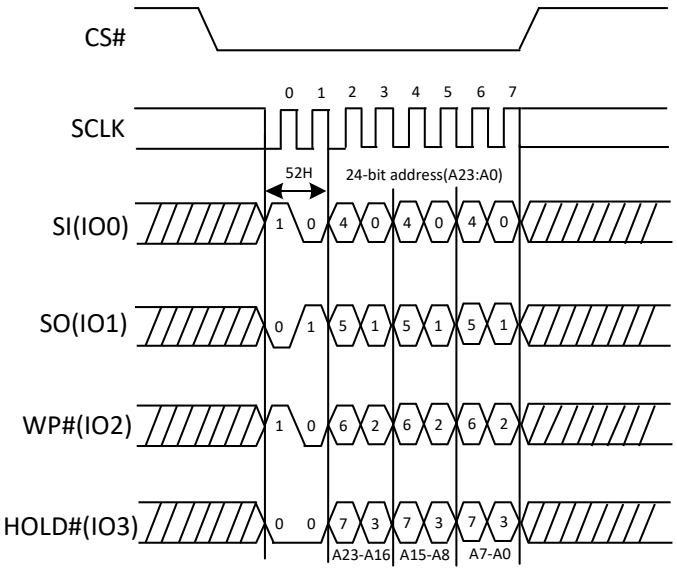

5.5.3. 64k Block Erase(D8H)

The 64KB Block Erase (BE) command is for erasing all the data of the chosen block. A Write Enable (WREN) command must previously have been executed to set the Write Enable Latch (WEL) bit, before sending the 64KB Block Erase command. The 64KB Block Erase (BE) command is entered by driving CS# low, followed by the command code, and three address bytes on SI, driving CS# high. Any address inside the block is a valid address for the 64KB Block Erase (BE) command.

The 64KB Block Erase command sequence: CS# goes low →sending 64KB Block Erase command→ 3-byte address on SI→CS# goes high. The command sequence is shown in Figure 22. CS# must be driven high after the eighth bit of the last address byte has been latched in; otherwise the 64KB Block Erase (BE) command will not be executed. As soon as CS# is driven high, the self-timed Block Erase cycle (whose duration is tBE) is initiated. While the Block Erase cycle is in progress, the Status Register can be read to check the value of the Write In Progress (WIP) bit. The Write In Progress (WIP) bit is 1 during the self-timed Block Erase cycle, and is 0 when it is completed. At some unspecified time before the cycle is completed, the Write Enable Latch (WEL) bit is reset. A 64KB Block Erase (BE) command applied to a block which is protected by the Block Protect (BP4, BP3, BP2, BP1, BP0) bits (see Table 1.0 & 1.1) will not be executed.

Note: Power disruption during erase operation will cause incomplete erase, thus it is recommended to perform a re-erase once power resume.

Figure 22. 64KB Block Erase Sequence Diagram

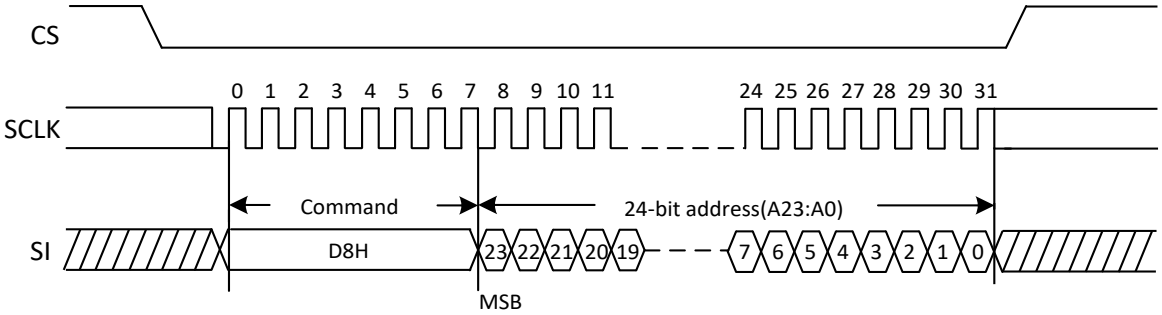

Figure 22a. 64KB Block Erase Sequence Diagram (QPI)

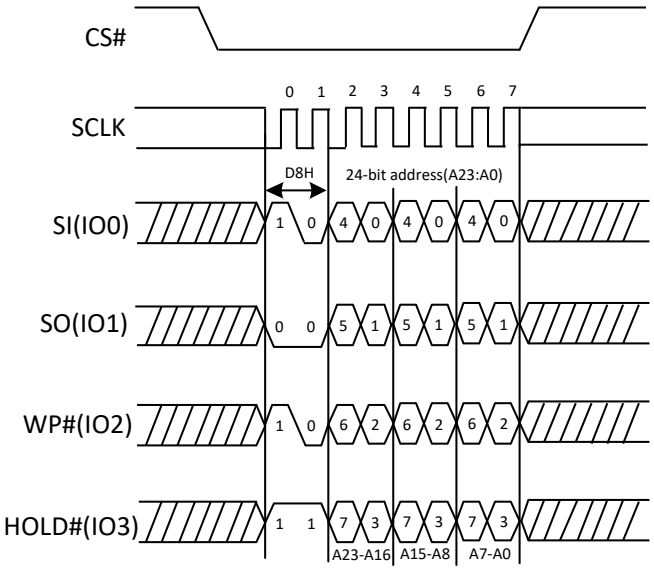

5.5.4. Chip Erase(60H or C7H)

The Chip Erase (CE) command is for erasing all the data of the chip. A Write Enable (WREN) command must previously have been executed to set the Write Enable Latch (WEL) bit, before sending the Chip Erase command .The Chip Erase (CE) command is entered by driving CS# Low, followed by the command code on Serial Data Input (SI).

The Chip Erase command sequence: CS# goes low→ sending Chip Erase command→CS# goes high. The command sequence is shown in Figure 23. CS# must be driven high after the eighth bit of the command code has been latch in, otherwise the Chip Erase command will not be executed. As soon as CS# is driven high, the self-timed Chip Erase cycle (whose duration is tCE) is initiated. While the Chip Erase cycle is in progress, the Status Register can be read to check the value of the Write In Progress (WIP) bit. The Write In Progress (WIP) bit is 1 during the self-timed Chip Erase cycle, and is 0 when it is completed. At some unspecified time before the cycle is completed, the Write Enable Latch (WEL) bit is reset. The Chip Erase (CE) command is ignored if one or more sectors are protected.

Note: Power disruption during erase operation will cause incomplete erase, thus it is recommended to perform a re-erase once power resume.

Figure 23. Chip Erase Sequence Diagram

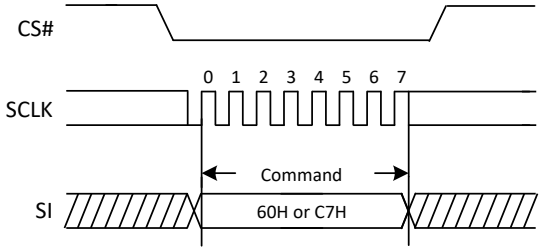

Figure 23a. Chip Erase Sequence Diagram (QPI)

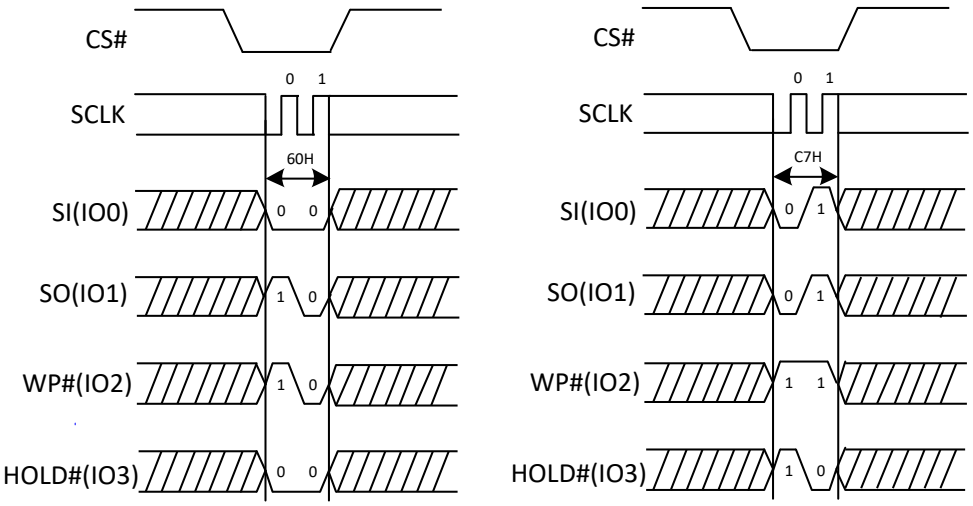

5.6. Security Register

5.6.1. Read Security Register(48H)

The Read Security Registers command is similar to Fast Read command. The command is followed by a 3-byte address (A23-A0) and a dummy byte, each bit being latched-in during the rising edge of SCLK. Then the memory content, at that address, is shifted out on SO, each bit being shifted out, at a Max frequency fC, during the falling edge of SCLK. The first byte addressed can be at any location. The address is automatically incremented to the next address after each byte of data is shifted out. Once the A9-A0 address reaches the last byte of the register (Byte 3FFH), it will reset to 000H, the command is completed by driving CS# high.

ADDRESS	A23-A16	A15-A12	A11-A10	A9-A0
Security Register 1	00h	0001b	00	Byte Address
Security Register 2	00h	0010b	00	Byte Address

Figure 24. Read Security Registers command Sequence Diagram

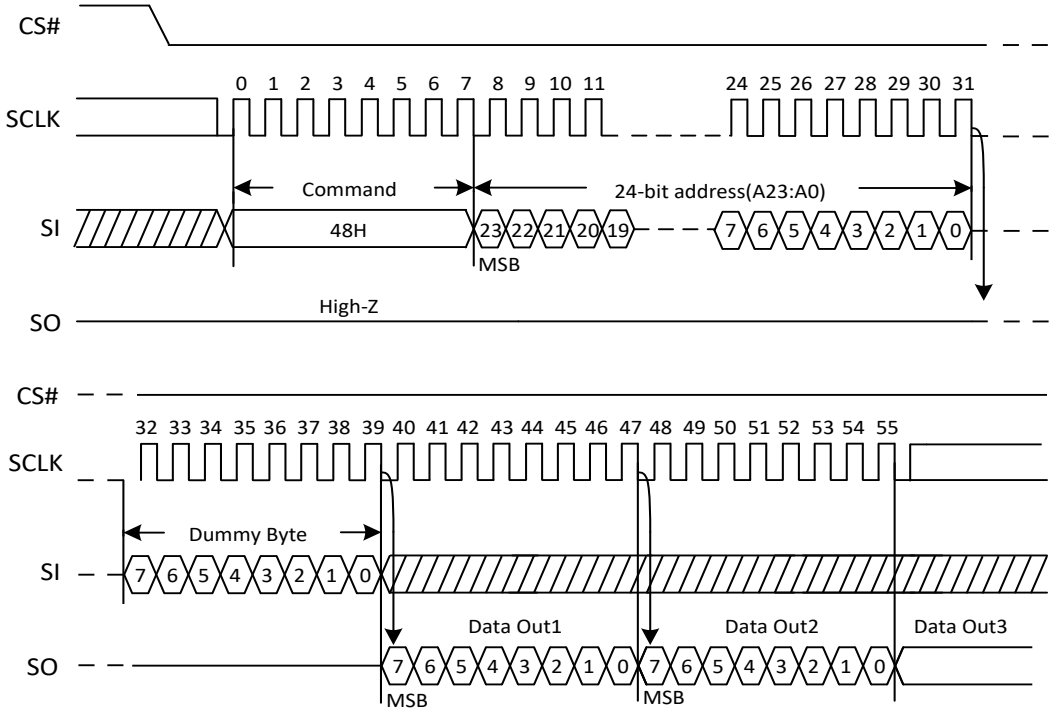

Note: The Byte Address A2-A0 must be 000.

5.6.2. Program Security Register(42H)

The Program Security Registers command is similar to the Page Program command. It allows from 1 to 256 bytes Security Registers data to be programmed. A Write Enable (WREN) command must previously have been executed to set the Write Enable Latch (WEL) bit before sending the Program Security Registers command. The Program Security Registers command is entered by driving CS# Low, followed by the command code (42H), three address bytes and at least one data byte on SI. As soon as CS# is driven high, the self-timed Program Security Registers cycle (whose duration is tPP) is initiated. While the Program Security Registers cycle is in progress, the Status Register may be read to check the value of the Write In Progress (WIP) bit. The Write In Progress (WIP) bit is 1 during the self-timed Program Security Registers cycle, and is 0 when it is completed. At some unspecified time before the cycle is completed, the Write Enable Latch (WEL) bit is reset.

If the Security Registers Lock Bit (LB1,LB2) is set to 1, the corresponding Security Registers (#1, #2) will be permanently locked. Program Security Registers command will be ignored.

ADDRESS	A23-A16	A15-A12	A11-A10	A9-A0
Security Register 1	00h	0001b	00	Byte Address
Security Register 2	00h	0010b	00	Byte Address

Figure 25. Program Security Registers command Sequence Diagram

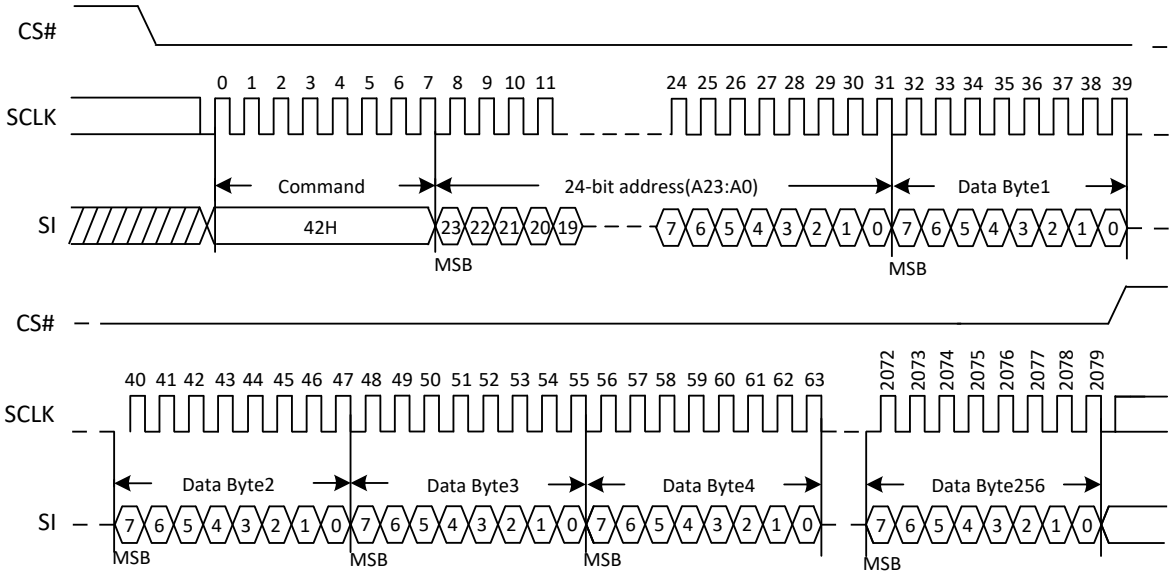

Note: When performing program security register or erase security register, program erase suspend (op code is 75H/B0H) is not allowed, if issuing suspend op code during program or erase security register, the device may enter into malfunction.

5.6.3. Erase Security Register(44H)

The device provides two 1024-byte Security Registers which only erased each 1024-byte at once. These registers may be used by the system manufacturers to store security and other important information separately from the main memory array.

The Erase Security Registers command is similar to Sector/Block Erase command. A Write Enable (WREN) command must previously have been executed to set the Write Enable Latch (WEL) bit.

The Erase Security Registers command sequence: CS# goes low→sending Erase Security Registers Command→CS# goes high. The command sequence is shown in Figure 26. CS# must be driven high after the eighth bit of the command code has been latched in, otherwise the Erase Security Registers command is not executed. As soon as CS# is driven high, the self-timed Erase Security Registers cycle (whose duration is tSE) is initiated. While the Erase Security Registers cycle is in progress, the Status Register may be read to check the value of the Write In Progress (WIP) bit. The Write In Progress (WIP) bit is 1 during the self-timed Erase Security Registers cycle, and is 0 when it is completed. At some unspecified time before the cycle is completed, the Write Enable Latch (WEL) bit is reset. The Security Registers Lock Bit (LB1,LB2) in the Status Register can be used to OTP protect the security registers. Once the LB bit is set to 1, the corresponding Security Registers (#1, #2) will be permanently locked; the Erase Security Registers command will be ignored.

ADDRESS	A23-A16	A15-A12	A11-A10	A9-A0
Security Register 1	00h	0001b	00	Don't care
Security Register 2	00h	0010b	00	Don't care

Figure 26. Erase Security Registers command Sequence Diagram

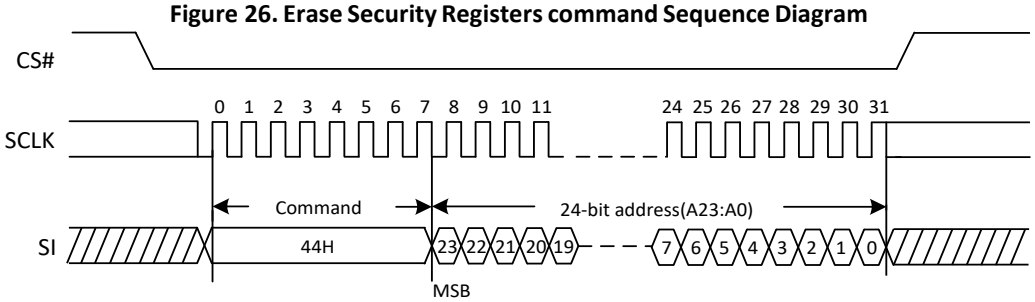

Note: When performing program security register or erase security register, program erase suspend (op code is 75H/B0H) is not allowed, if issuing suspend op code during program or erase security register, the device may enter into malfunction.

5.7. Status Register

5.7.1. Read Status Register (05H or 35H or 15H)

The Read Status Register (RDSR) command is for reading the Status Register. The Status Register can be read at any time, even while a Program, Erase or Write Status Register cycle is in progress. When one of these cycles is in progress, it is recommended to check the Write In Progress (WIP) bit before sending a new command to the device. It is also possible to read the Status Register continuously. For command code "05H", the SO will output Status Register bits S7~S0. For the command code "35H", the SO will output Status Register bits S15~S8. For the command code "15H", the SO will output Status Register bits S23~S16.

Figure 27. Read Status Register Sequence Diagram

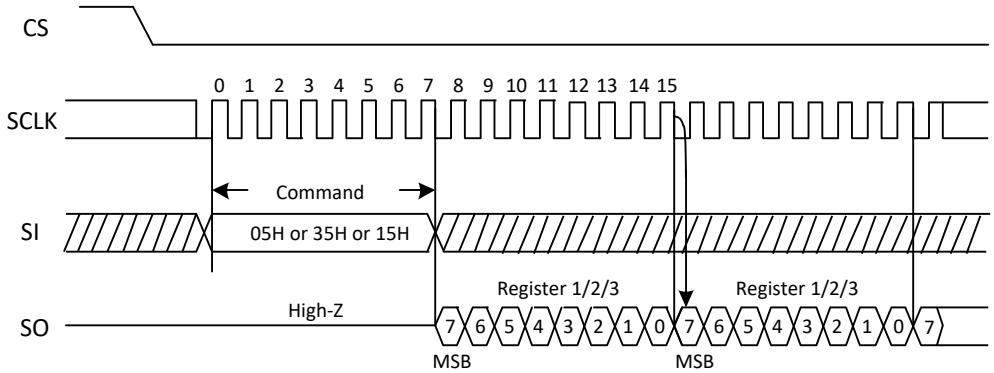

Figure 27a. Read Status Register Sequence Diagram (QPI)

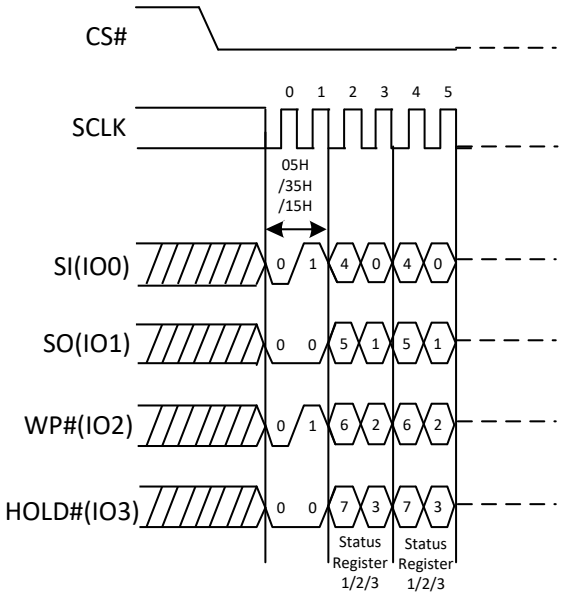

5.7.2. Write Status Register (01H or 31H or 11H)

The Write Status Register (WRSR) command allows new values to be written to the Status Register. Before it can be accepted, a Write Enable (WREN) command must previously have been executed. After the Write Enable (WREN) command has been decoded and executed, the device sets the Write Enable Latch (WEL).

The Write Status Register (WRSR) command has no effect on S20, S19, S16, S13, S1 and S0 of the Status Register. CS# must be driven high after the eighth bit of the data byte has been latched in. If not, the Write Status Register (WRSR) command is not executed. As soon as CS# is driven high, the self-timed Write Status Register cycle (whose duration is tW) is initiated. While the Write Status Register cycle is in progress, the Status Register may still be read to check the value of the Write In Progress (WIP) bit. The Write In Progress (WIP) bit is 1 during the self-timed Write Status Register cycle, and is 0 when it is completed. When the cycle is completed, the Write Enable Latch (WEL) is reset.

The Write Status Register (WRSR) command allows the user to change the values of the Block Protect (BP4, BP3, BP2, BP1, BP0) bits, to define the size of the area that is to be treated as read-only, as defined in Table 1.0 & 1.1 The Write Status Register (WRSR) command also allows the user to set or reset the Status Register Protect (SRP) bit in accordance with the Write Protect (WP#) signal. The Status Register Protect (SRP) bit and Write Protect (WP#) signal allow the device to be put in the Hardware Protected Mode. The Write Status Register (WRSR) command is not executed once the Hardware Protected Mode is entered. For command code “01H”, the SI will input Status Register bits S7~S0. For the command code “31H”, the SI will input Status Register bits S15~S8. For the command code “11H”, the SI will input Status Register bits S23~S16.

Figure 28. Write Status Register Sequence Diagram

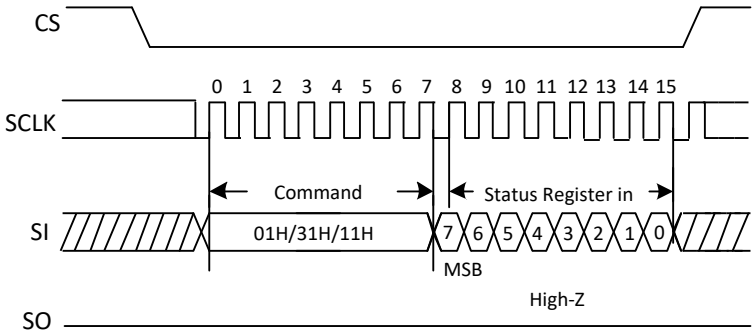

Figure 28a. Write Status Register Sequence Diagram (QPI)

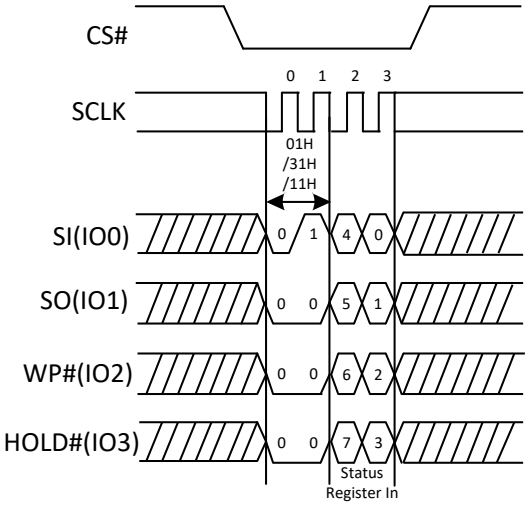

Note: If issue op code as 06H+50H+01H, this kind of op code combination will write the non-volatile register; We strongly suggest to issue op code separately, either 06H+01H or 50H+01H;

5.8. Deep Power-Down

5.8.1. Deep Power-Down(B9H)

Executing the Deep Power-Down (DP) command is the only way to put the device in the lowest power consumption mode (the Deep Power-Down Mode). It can also be used as an extra software protection mechanism, since in this mode, the device ignores all Write, Program and Erase commands. Driving CS# high deselects the device, and puts the device in the Standby Mode (if there is no internal cycle currently in progress). But the Standby Mode is different from the Deep Power-Down Mode. The Deep Power-Down Mode can only be entered by executing the Deep Power-Down (DP) command. Once the flash memory has entered the Deep Power-Down Mode, all commands are ignored except the Release from Deep Power-Down and Read Device ID (RDI) command (ABH) and Software Reset(66H + 99H). These commands release the flash memory from the Deep Power-Down Mode.

The Deep Power-Down Mode automatically stops at Power-Off, and the device always Power-Up in the Standby Mode. The Deep Power-Down (DP) command is entered by driving CS# low, followed by the command code on SI, driving CS# high.

The Deep Power-Down command sequence: CS# goes low→sending Deep Power-Down command→CS# goes high. The command sequence is shown in Figure 29. CS# must be driven high after the eighth bit of the command code has been latched in; otherwise the Deep Power-Down (DP) command will not be executed. As soon as CS# is driven high, it requires a time duration of tDP before the supply current is reduced to ICC2 and the Deep Power-Down Mode is entered. Any input of Deep Power-Down (DP) command, while an Erase, Program or Write cycle is in progress, is rejected without having any effects on the cycle that is in progress.

Figure 29. Deep Power-Down Sequence Diagram

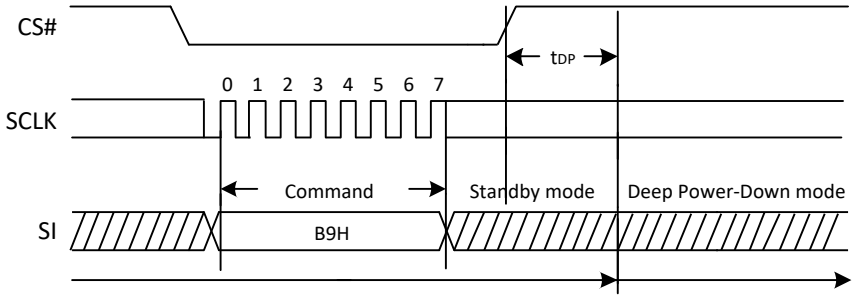

Figure 29a. Deep Power-Down Sequence Diagram (QPI)

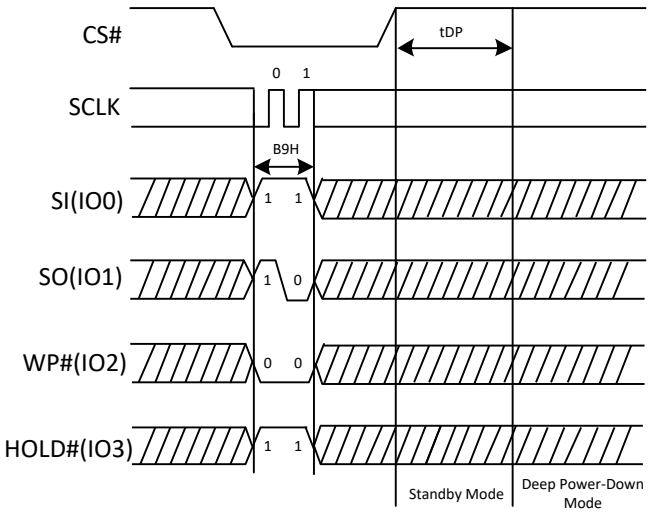

5.8.2. Release From Deep Power-Down(ABH)

The Release from Deep Power-Down and Read Device ID command is a multi-purpose command. It can be used to release the device from Deep Power-Down Mode or obtain the devices electronic identification (ID) number.

To release the device from Deep Power-Down Mode, the command is issued by driving the CS# pin low, shifting the instruction code “ABH” and driving CS# high as shown in Figure 30. Release from Deep Power-Down Mode will take the time duration of tRES1 (See AC Characteristics) before the device resume to normal state and other command are accepted. The CS# pin must remain high during the tRES1 time duration.

When the command is used only to obtain the Device ID while the flash memory is not in Deep Power-Down Mode, the command is initiated by driving the CS# pin low and shifting the instruction code “ABH” followed by 3 dummy byte. The Device ID bits are then shifted out on the falling edge of SCLK with most significant bit (MSB) first as shown in Figure30b. The Device ID value is listed in Manufacturer and Device Identification table. The Device ID can be read continuously. The command is completed by driving CS# high.

When the command is used to release the device from Deep Power-Down Mode and obtain the Device ID, the command is the same as previously described, and shown in Figure 30b. , except that after CS# is driven high it must remain high for a time duration of tRES2 (See AC Characteristics). After this time duration the device will resume to normal mode and other command will be accepted. If the Release from Deep Power-Down and Read Device ID command is issued while an Erase, Program or Write cycle is in process (when WIP equal 1) the command will be ignored and will not affect the current cycle.

Figure 30. Release Power-Down Sequence Diagram

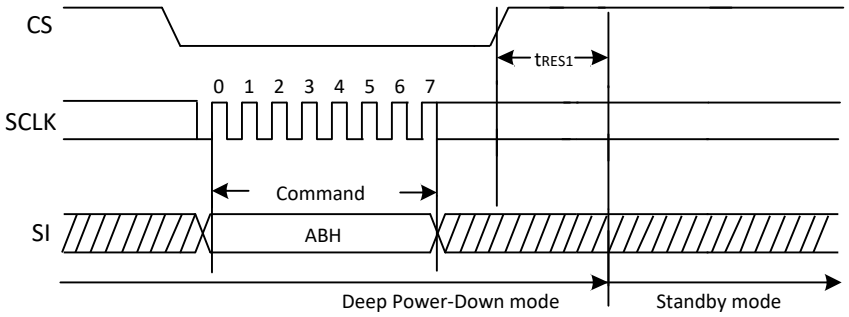

Figure 30a. Release Power-Down Sequence Diagram (QPI)

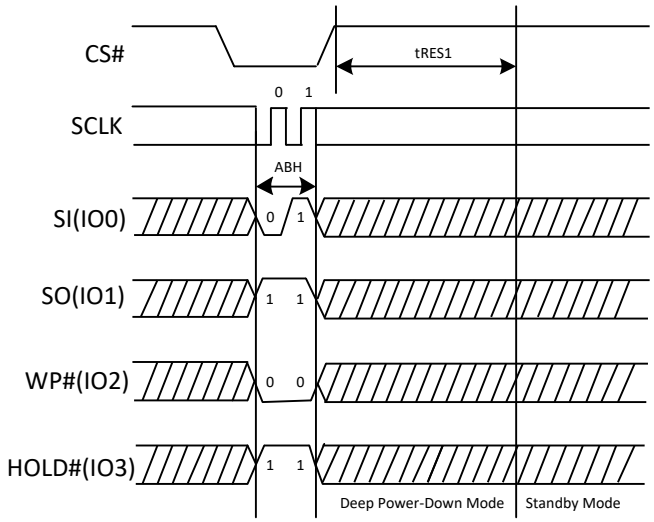

Figure 30b. Release Power-Down/Read Device ID Sequence Diagram

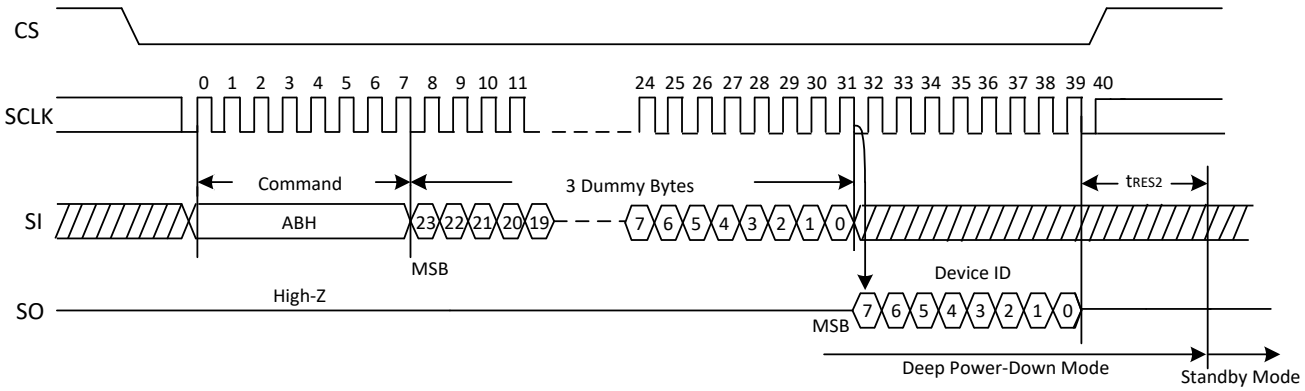

Figure 30c. Release Power-Down/Read Device ID Sequence Diagram (QPI)

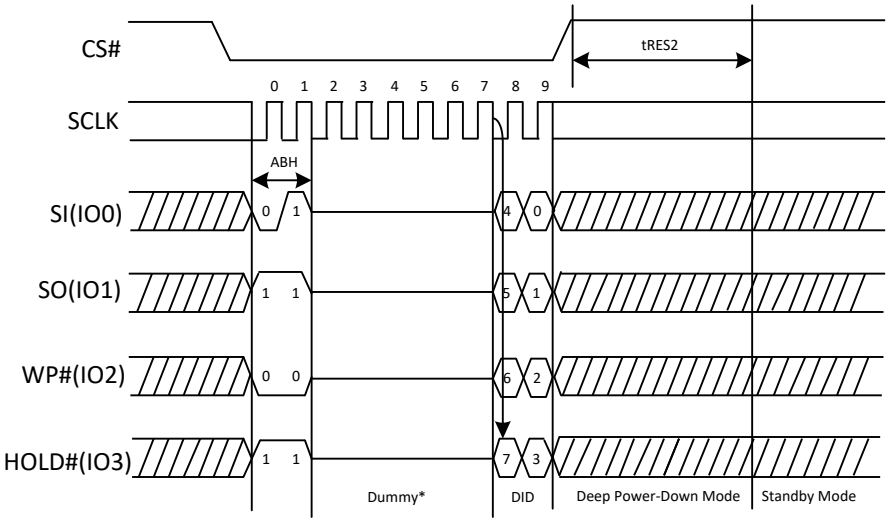

5.9. Software Reset

5.9.1. Enable Reset (66H) and Reset (99H)

If the Reset command is accepted, any on-going internal operation will be terminated and the device will return to its default power-on state and lose all the current volatile settings, such as Volatile Status Register bits, Write Enable Latch status (WEL), Read Parameter setting (P7-P0) and Wrap Bit Setting (W6-W4).

The "Reset (99H)" command sequence as follow: CS# goes low → Sending Enable Reset command → CS# goes high → CS# goes low → Sending Reset command → CS# goes high. Once the Reset command is accepted by the device, the device will take approximately tRST_R to reset. During this period, no command will be accepted. Data corruption may happen if there is an on-going internal Erase or Program operation when Reset command sequence is accepted by the device. It is recommended to check the BUSY bit and the SUS bit in Status Register before issuing the Reset command sequence.

The Enable Reset (66H) command must be issued prior to a Reset(99H) command and any other commands can't be inserted between them. Otherwise, Enable Reset (66H) command will be cleared.

Figure 31. Enable Reset and Reset command Sequence Diagram

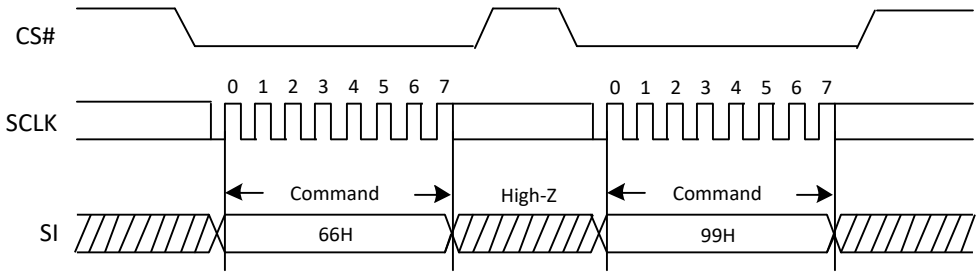

Figure 31a. Enable Reset and Reset command Sequence Diagram (QPI)

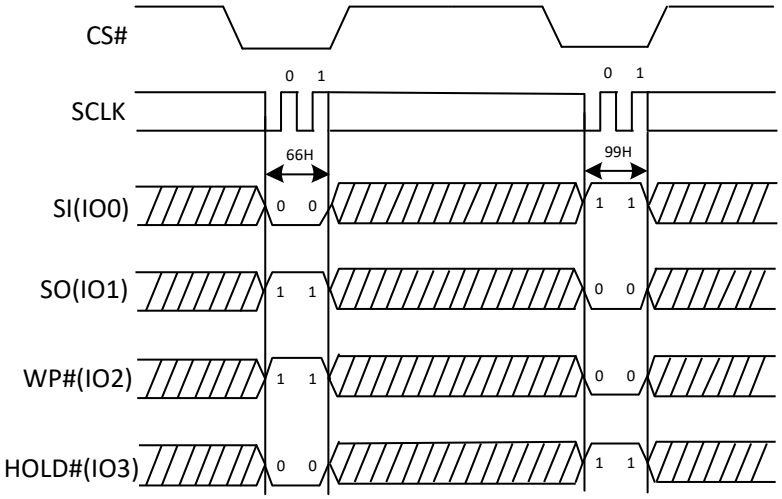

5.10. Read ID

5.10.1. Read Manufacture ID/ Device ID (90H)

The Read Manufacturer/Device ID command is an alternative to the Release from Deep Power-Down and Read Device ID command that provides both the JEDEC assigned Manufacturer ID and the specific Device ID.

The command is initiated by driving the CS# pin low and shifting the command code "90H" followed by a 24-bit address (A23-A0) of 000000H. After which, the Manufacturer ID and the Device ID are shifted out on the falling edge of SCLK with most significant bit (MSB) first is shown in Figure 32. If the 24-bit address is initially set to 000001H, the Device ID will be read first.

Figure 32. Read Manufacture ID/ Device ID Sequence Diagram

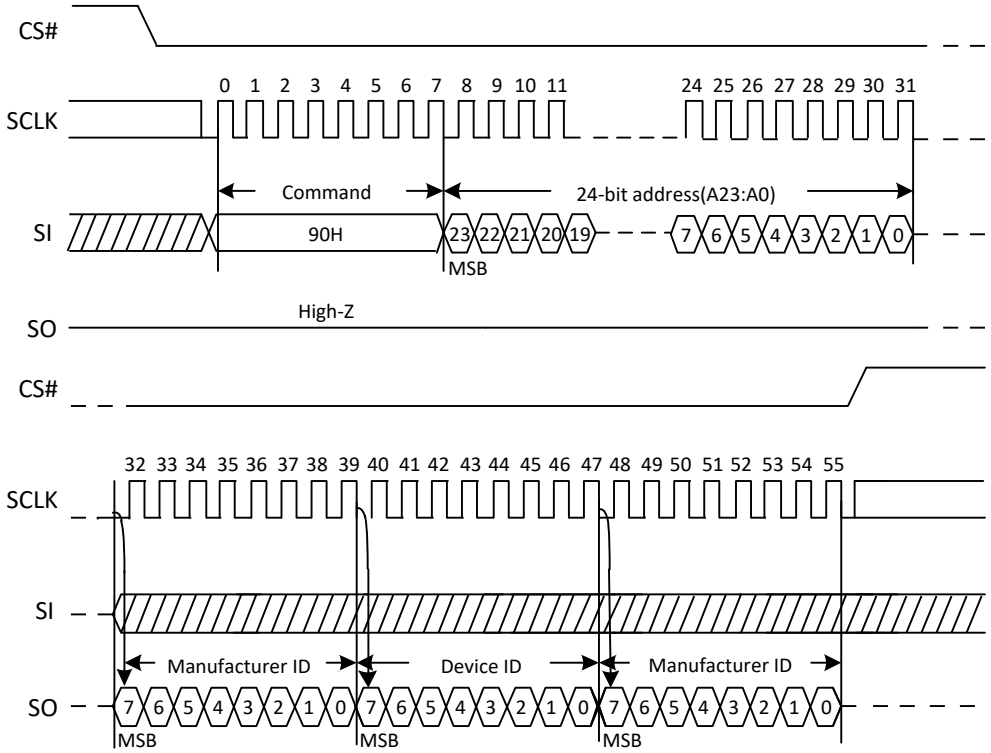

Figure 32a. Read Manufacture ID/ Device ID Sequence Diagram (QPI)

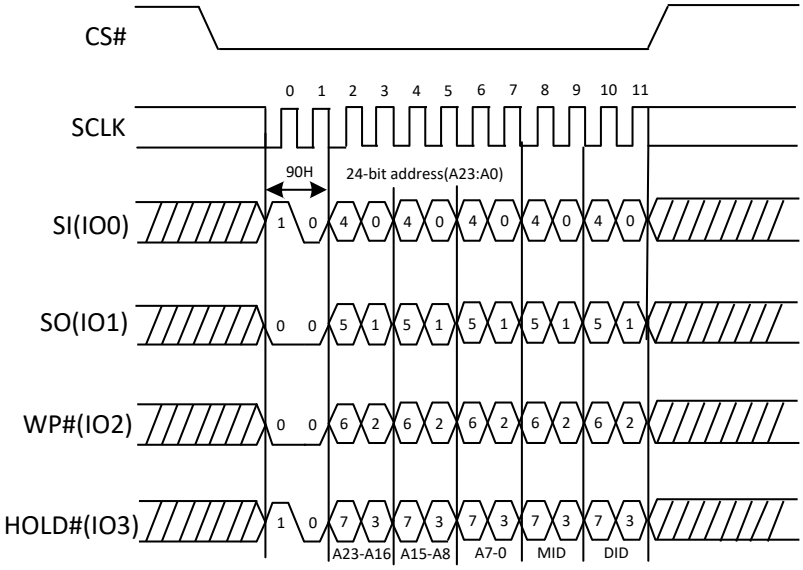

5.10.2. Read Manufacture ID/ Device ID Dual I/O (92H)

The Read Manufacturer/Device ID Dual I/O command is an alternative to the Release from Power-Down / Device ID command that provides both the JEDEC assigned Manufacturer ID and the specific Device ID by dual I/O.

The command is initiated by driving the CS# pin low and shifting the command code "92H" followed by a 24-bit address (A23-A0) of 000000H. After which, the Manufacturer ID and the Device ID are shifted out on the falling edge of SCLK with most significant bit (MSB) first as shown in Figure 33 If the 24-bit address is initially set to 000001H, the Device ID will be read first.

Figure 33. Read Manufacture ID/ Device ID Dual I/O Sequence Diagram

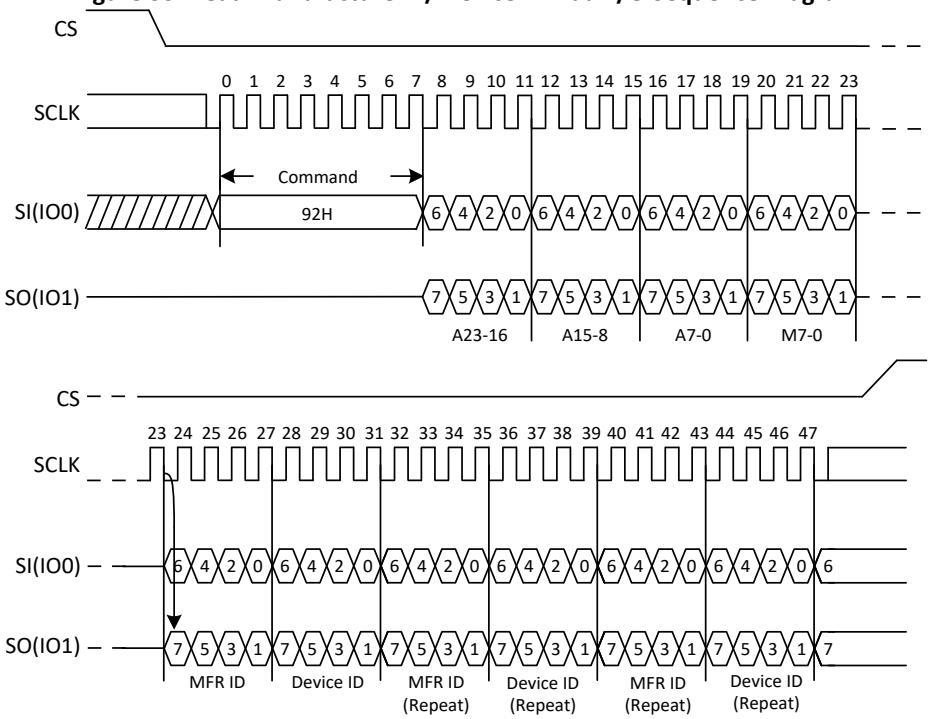

5.10.3. Read Manufacture ID/ Device ID Quad I/O (94H)

The Read Manufacturer/Device ID Quad I/O command is an alternative to the Release from Deep Power-Down and Read Device ID command that provides both the JEDEC assigned Manufacturer ID and the specific Device ID by quad I/O. The command is initiated by driving the CS# pin low and shifting the command code "94H" followed by a 24-bit address (A23-A0) of 000000H. After which, the Manufacturer ID and the Device ID are shifted out on the falling edge of SCLK with most significant bit (MSB) first is shown in Figure 34. If the 24-bit address is initially set to 000001H, the Device ID will be read first.

Figure 34. Read Manufacture ID/ Device ID Quad I/O Sequence Diagram

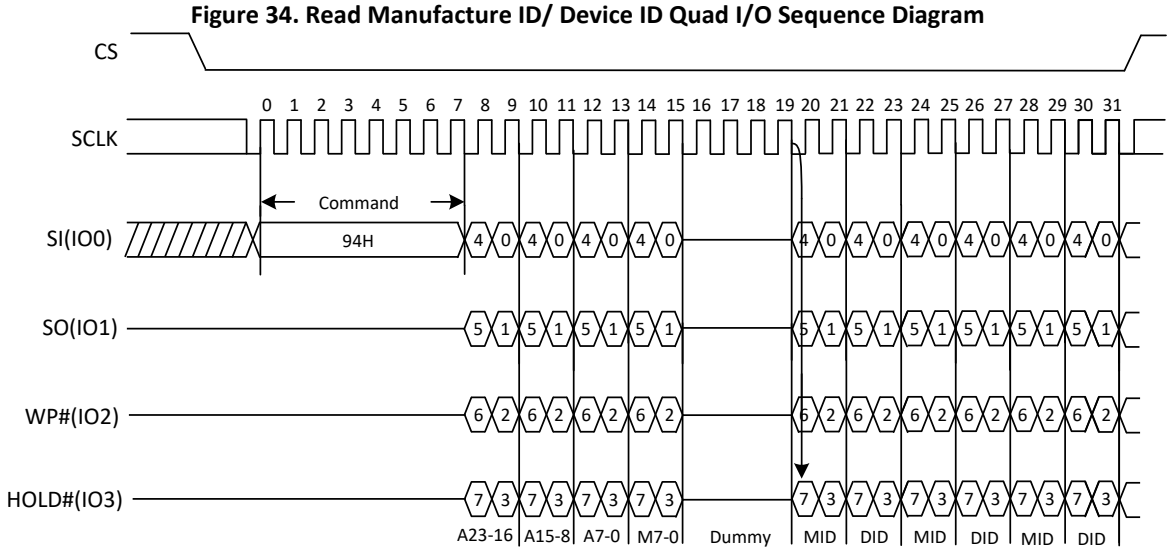

5.10.4. Read Identification (9FH)

The Read Identification (RDID) command allows the 8-bit manufacturer identification to be read, followed by two bytes of device identification. The device identification indicates the memory type in the first byte, and the memory capacity of the device in the second byte. Any Read Identification (RDID) command while an Erase or Program cycle is in progress will not be decoded, and has no effect on the cycle that is in progress. The Read Identification (RDID) command should not be issued while the device is in Deep Power-Down Mode.

The device is first selected by driving CS# to low. Then, the 8-bit command code for the command is shifted in. This is followed by the 24-bit manufacture identification and device identification, stored in the memory, being shifted out on Serial Data Output in repeat, each bit being shifted out during the falling edge of Serial Clock. The command sequence is shown in Figure 35. The Read Identification (RDID) command is terminated by driving CS# to high at any time during data output. When CS# is driven high, the device is put in the Standby Mode. Once in the Standby Mode, the device waits to be selected, so that it can receive, decode and execute commands.

Figure 35. Read Identification ID Sequence Diagram

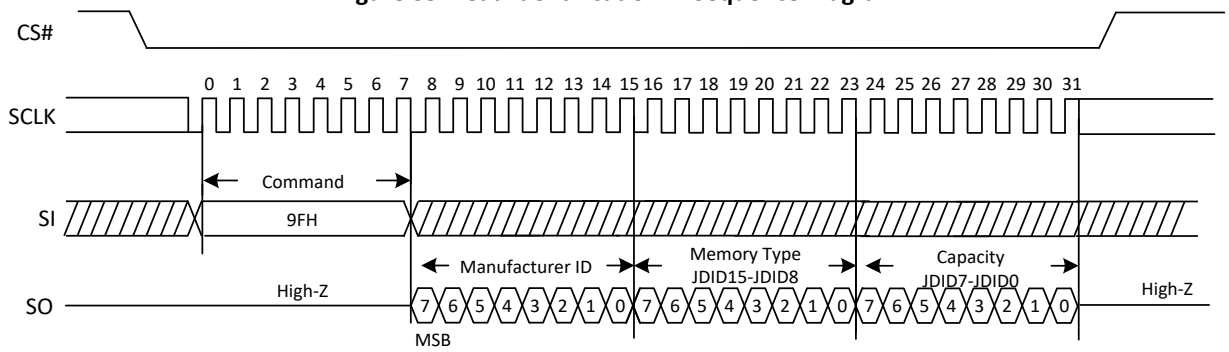

Figure 35a. Read Identification ID Sequence Diagram (QPI)

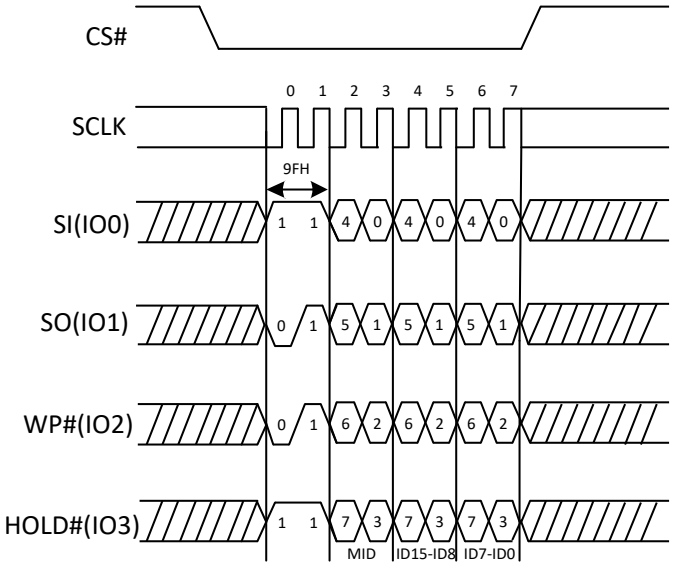

5.10.5. Read Unique ID(4BH)

The Read Unique ID command accesses a factory-set read-only 128bit number that is unique to each device. The Unique ID can be used in conjunction with user software methods to help prevent copying or cloning of a system.

The Read Unique ID command sequence: CS# goes low → sending Read Unique ID command →4 dummy bytes → 128bit Unique ID Out → CS# goes high.

The command sequence is show below.

Figure 36. Read Unique ID (RUID) Sequence (Command 4BH)

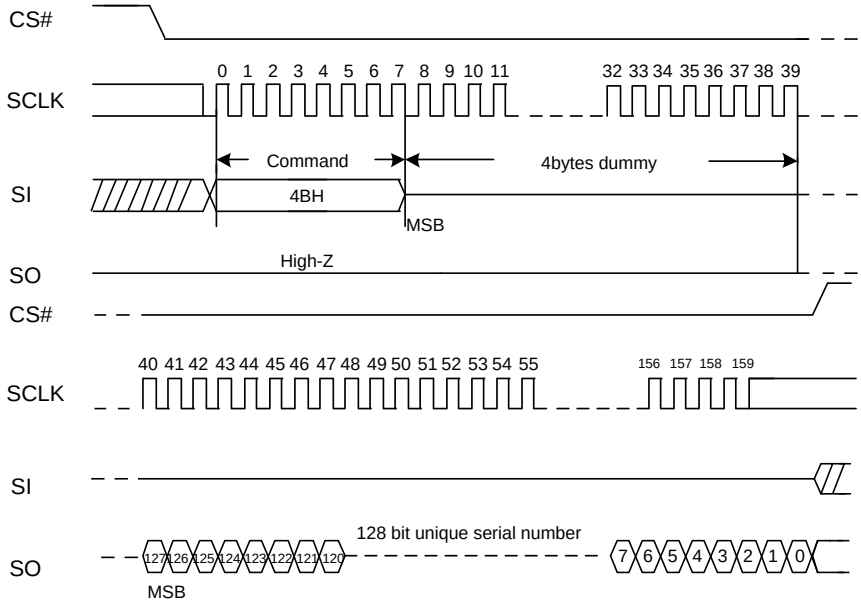

Read Unique ID (4BH) in QPI mode

The Read Unique ID command is also supported in QPI mode. See Figure 36a. In QPI mode, the number of dummy clocks is configured by the "Set Read Parameters (C0H)" command to accommodate a wide range application with different needs for either maximum Fast Read frequency or minimum data access latency. Depending on the Read Parameter Bits P[5:4] setting, the number of dummy clocks can be configured as either 4/6/8.

Figure 36a. Read Unique ID (RUID) Sequence (Command 4BH) (QPI)

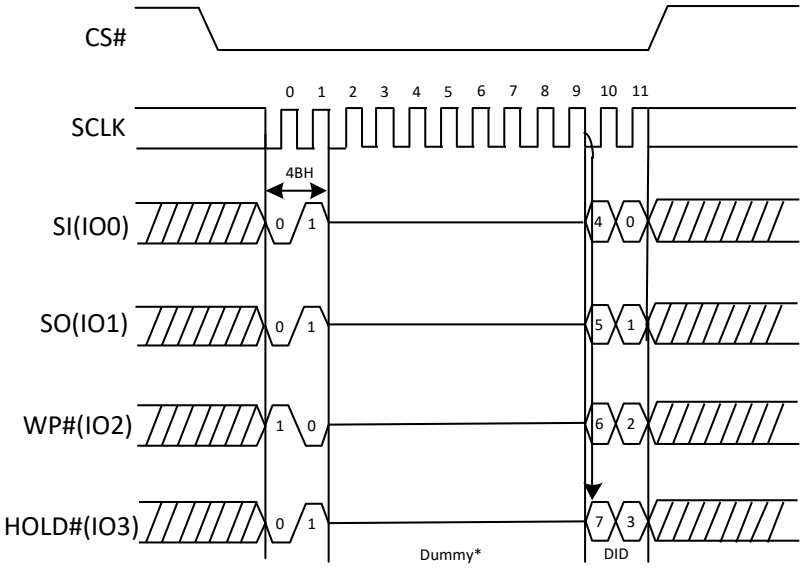

*Set Read Parameters command (C0H) can set the number of dummy cycles

5.10.6. Read SFDP(5AH)

The Serial Flash Discoverable Parameter (SFDP) standard provides a consistent method of describing the functional and feature capabilities of serial flash devices in a standard set of internal parameter tables. These parameter tables can be interrogated by host system software to enable adjustments needed to accommodate divergent features from multiple vendors. The concept is similar to the one found in the Introduction of JEDEC Standard, JESD68 on CFI. SFDP is a standard of JEDEC Standard No.216.

Figure 37. Read Serial Flash Discoverable Parameter command Sequence Diagram

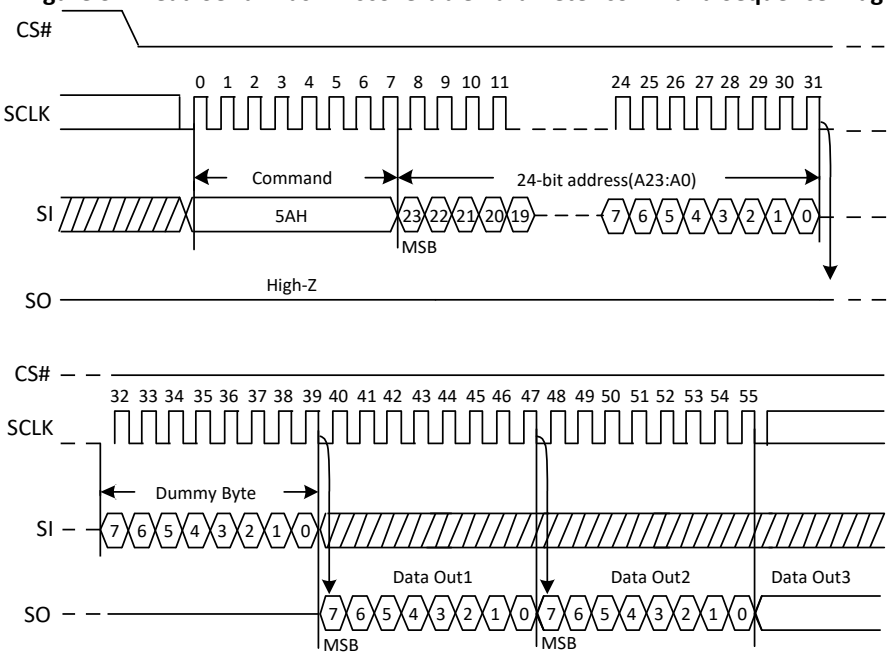

Note: A23-A8 = 0, A7-A0 is the starting byte address for 256-byte SFDP Register.

Read Serial Flash Discoverable Parameter (5AH) in QPI mode

The Read Serial Flash Discoverable Parameter command is also supported in QPI mode. See Figure 37a. In QPI mode, the number of dummy clocks is configured by the "Set Read Parameters (C0H)" command to accommodate a wide range application with different needs for either maximum Fast Read frequency or minimum data access latency. Depending on the Read Parameter Bits P[5:4] setting, the number of dummy clocks can be configured as either 4/6/8.

Figure 37a. Read Serial Flash Discoverable Parameter command Sequence Diagram (QPI)

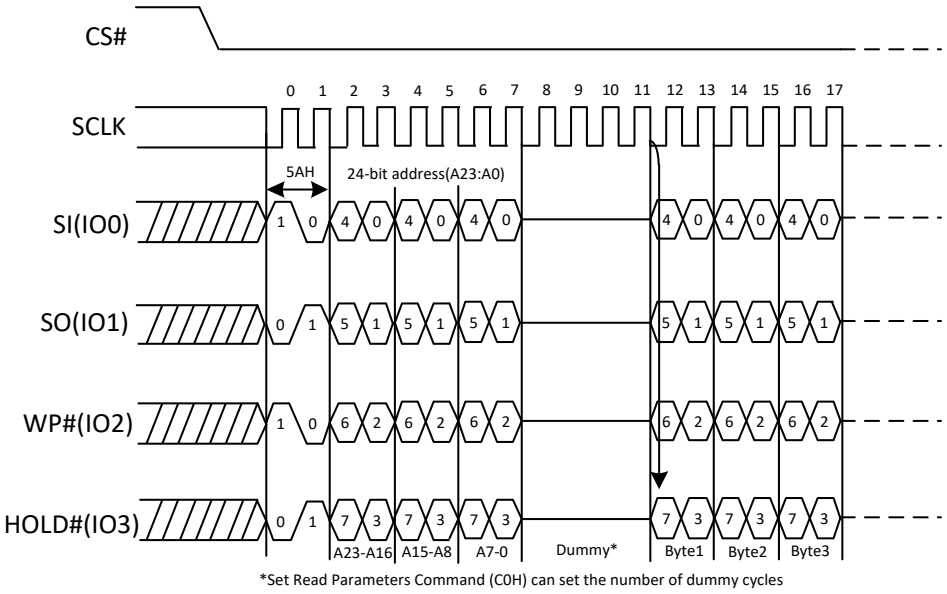

5.11. Advanced Data Protection

5.11.1. Individual Block/Sector Lock (36H)/Unlock (39H)/Read (3DH)

The individual block/sector lock provides an alternative way to protect the memory array from adverse Erase/Program. In order to use the Individual Block/Sector Locks, the WPS bit in Status Register-3 must be set to 1. If WPS=0, the write protection will be determined by the combination of CMP, BP (4:0) bits in the Status Register. The Individual Block/Sector Lock bits are volatile bits, the default values of which after device power up or after a Reset are 1.

The individual Block/Sector Lock command (36H) sequence: CS# goes low –> SI: Sending individual Block/Sector Lock command –> SI: Sending 24bits individual Block/Sector Lock Address –> CS# goes high. The command sequence is shown in Figure 38.

The individual Block/Sector Unlock command (39H) sequence: CS# goes low –> SI: Sending individual Block/Sector Unlock command –> SI: Sending 24bits individual Block/Sector Lock Address –> CS# goes high. The command sequence is shown in Figure 38a.

The Read individual Block/Sector lock command (3DH) sequence: CS# goes low –> SI: Sending Read individual Block/Sector Lock command –> SI: Sending 24bits individual Block/Sector Lock Address –> SO: The Block/Sector Lock Bit will out –> CS# goes high. If the least significant bit (LSB) is1, the corresponding block/sector is locked, if the LSB is 0, the corresponding block/sector is unlocked, Erase/Program operation can be performed. The command sequence is shown in Figure 38c.

Figure 38. Individual Block/Sector Lock command Sequence Diagram

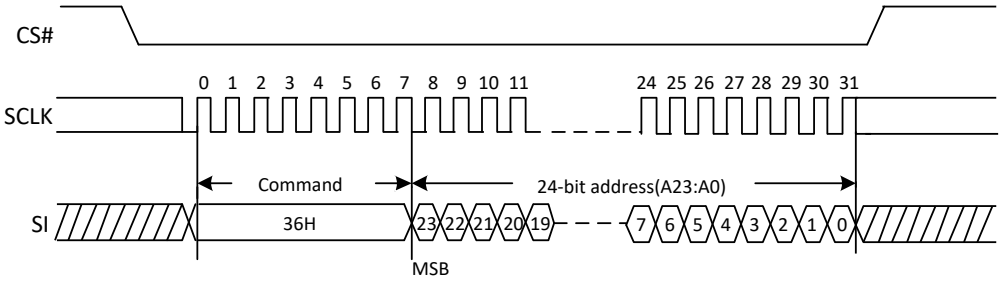

Figure 38a. Individual Block/Sector Lock command Sequence Diagram (QPI)

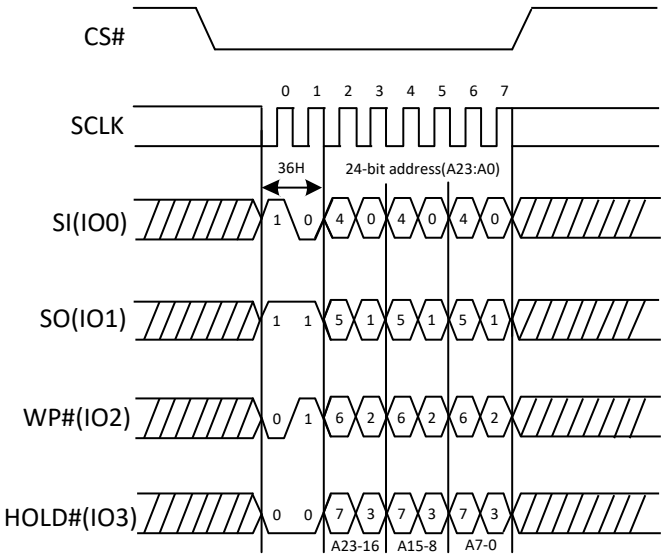

Figure 38b. Individual Block/Sector Unlock command Sequence Diagram

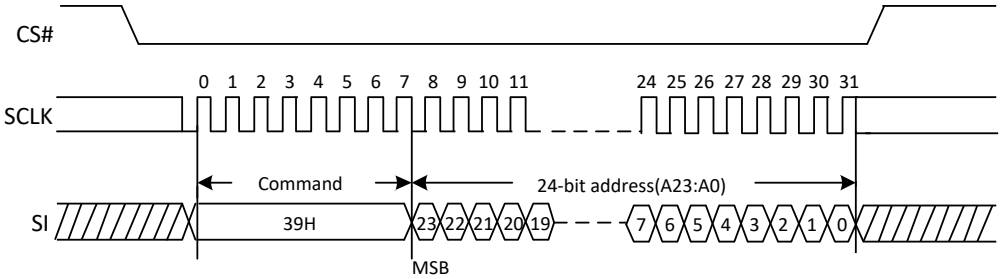

Figure 38c. Individual Block/Sector Unlock command Sequence Diagram (QPI)

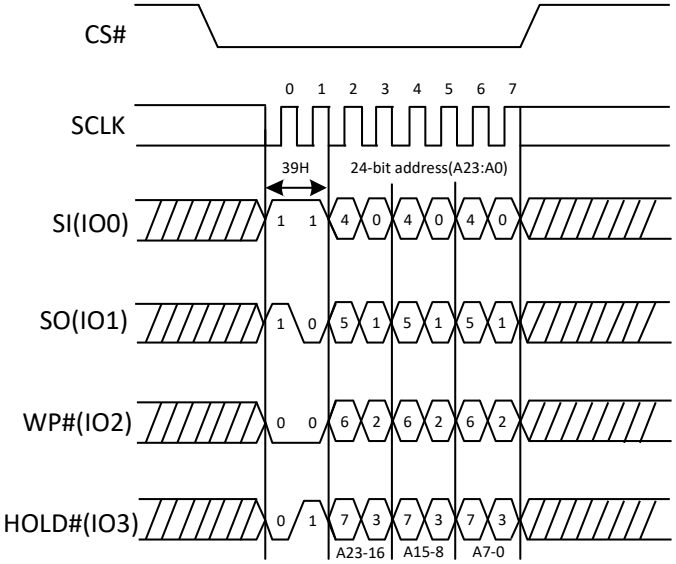

Figure 38d. Read Individual Block/Sector lock command Sequence Diagram

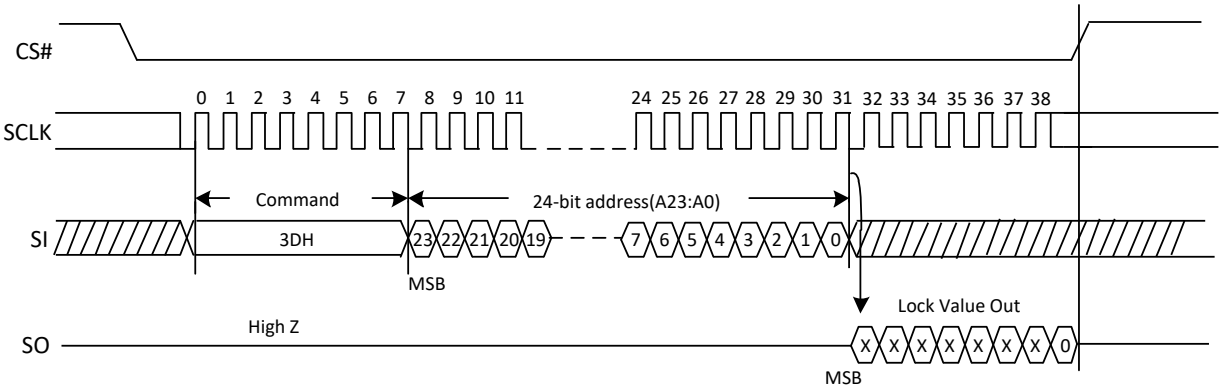

Figure 38e. Read Individual Block/Sector lock command Sequence Diagram (QPI)

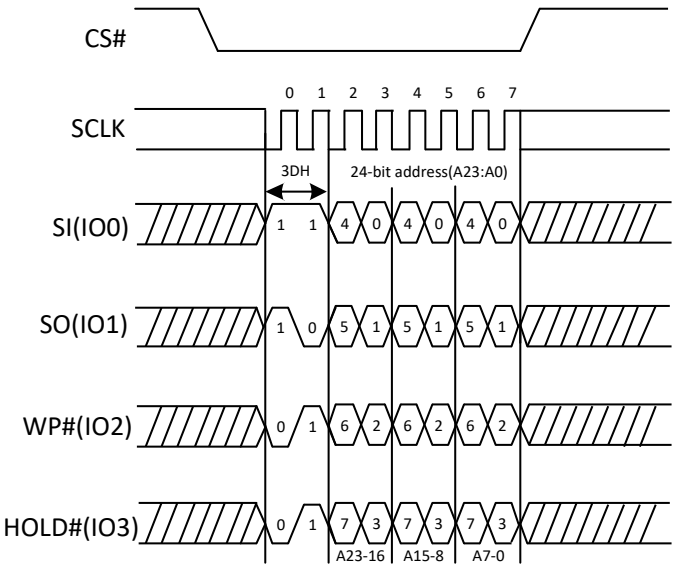

5.11.2. Global Block/Sector Lock (7EH) or Unlock (98H)

All Block/Sector Lock bits can be set to 1 by the Global Block/Sector Lock command, or can set to 0 by the Global Block/Sector Unlock command.

The Global Block/Sector Lock command (7EH) sequence: CS# goes low –> SI: Sending Global Block/Sector Lock command –> CS# goes high. The command sequence is shown in Figure 39.

The Global Block/Sector Unlock command (98H) sequence: CS# goes low –> SI: Sending Global Block/Sector Unlock command –> CS# goes high. The command sequence is shown in Figure 39b.

Figure 39. The Global Block/Sector Lock Sequence Diagram

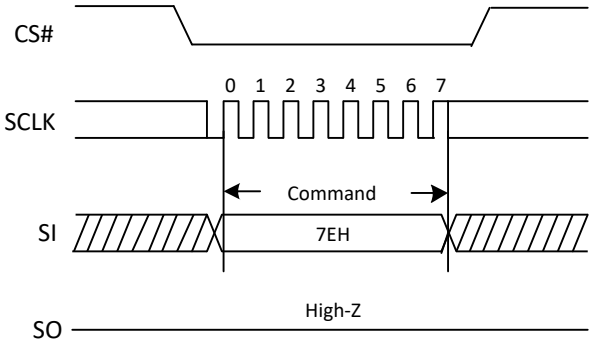

Figure 39a. The Global Block/Sector Lock Sequence Diagram (QPI)

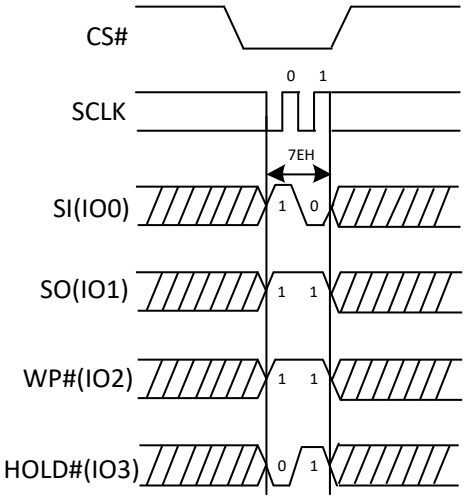

Figure 39b. The Global Block/Sector Unlock Sequence Diagram

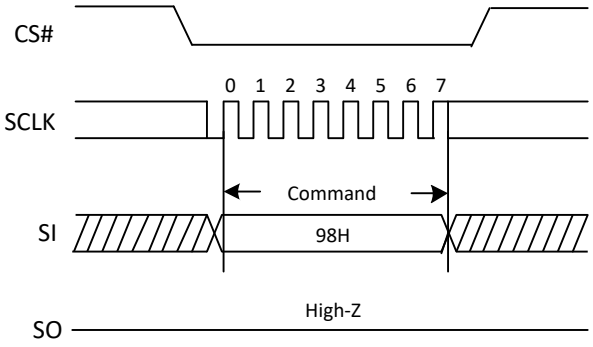

Figure 39c. The Global Block/Sector Unlock Sequence Diagram (QPI)

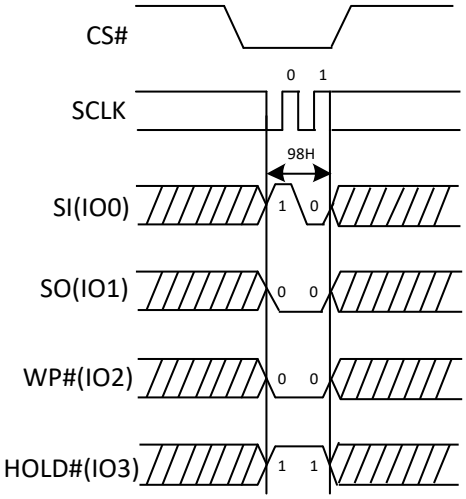

5.12. Suspend

5.12.1. Program Erase Suspend(75H/B0H)

The Program/Erase Suspend command “75H”, allows the system to interrupt a page program or sector/block erase operation and then read data from any other sector or block. The Write Status Register command (01H/31H/11H) and Erase/Program Security Registers command (44H,42H) and Erase commands (20H, 52H, D8H, C7H, 60H) and Page Program command (02H/32H) are not allowed during Program suspend. The Write Status Register command (01H/31H/11H) and Erase Security Registers command (44H) and Erase commands (20H, 52H, D8H, C7H, 60H) are not allowed during Erase suspend. Program/Erase Suspend is valid only during the page program or sector/block erase operation. A maximum of time of “tSUS” (See AC Characteristics) is required to suspend the program/erase operation.

The Program/Erase Suspend command will be accepted by the device only if the SUS bit in the Status Register equal to 0 and WIP bit equal to 1 while a Page Program or a Sector or Block Erase operation is on-going. If the SUS bit equal to 1 or WIP bit equal to 0, the Suspend command will be ignored by the device. The WIP bit will be cleared form 1 to 0 within “tSUS” and the SUS bit will be set from 0 to 1 immediately after Program/Erase Suspend. A power-off during the suspend period will reset the device and release the suspend state. The command sequence is show in Figure 40.

Figure 40. Program/Erase Suspend Sequence Diagram

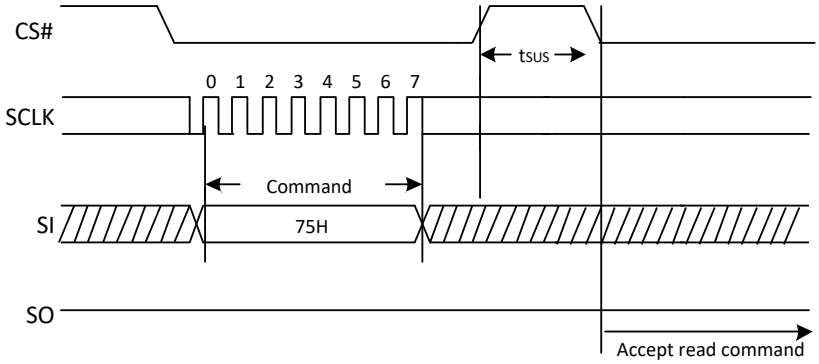

Figure 39a. Program/Erase Suspend Sequence Diagram(QPI)

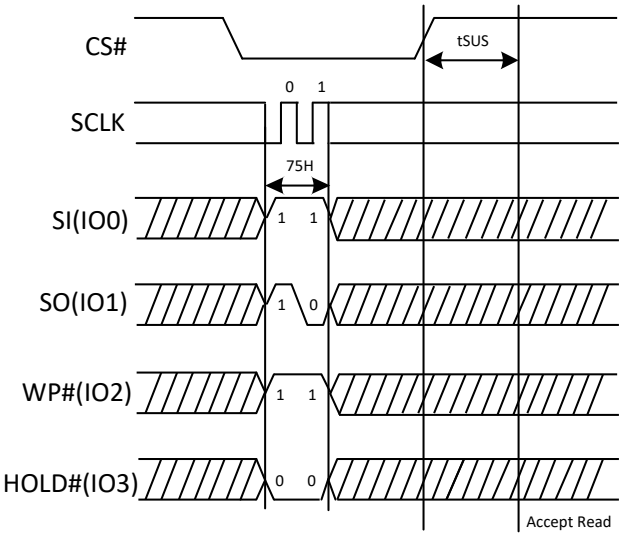

5.12.2. Program Erase Resume (7AH/30H)

The Program/Erase Resume command must be written to resume the program or sector/block erase operation after a Program/Erase Suspend command. The Program/Erase command will be accepted by the device only if the SUS bit equal to 1 and the WIP bit equal to 0. After issued the SUS bit in the status register will be cleared from 1 to 0 immediately, the WIP bit will be set from 0 to 1 within 200ns and the Sector or Block will complete the erase operation or the page will complete the program operation. The Program/Erase Resume command will be ignored unless a Program/Erase Suspend is active. The command sequence is show in Figure 41.

Figure 41. Program/Erase Resume Sequence Diagram

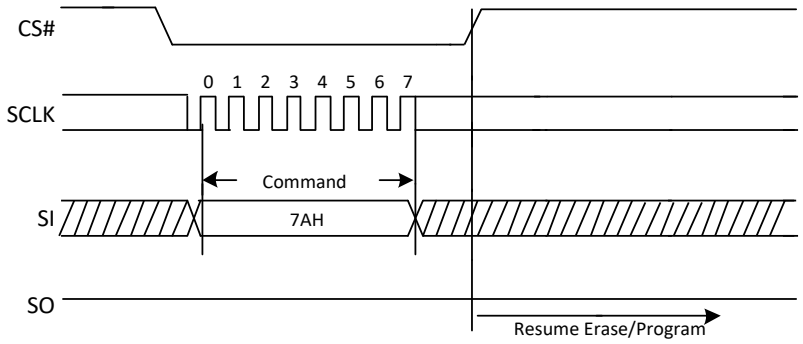

Figure 40a. Program/Erase Resume Sequence Diagram (QPI)

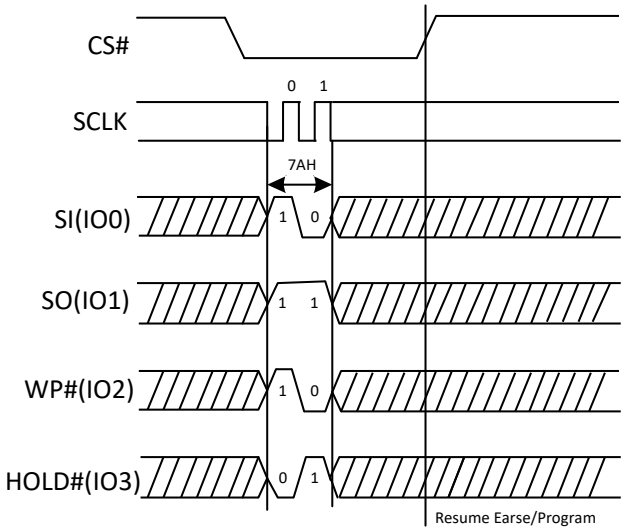

5.13. Wrap

5.13.1. Set Burst With Wrap(77H)

The Set Burst with Wrap command is used in conjunction with "Quad I/O Fast Read (EBH)", "Quad I/O Word Fast Read (E7H)" and "Quad Read under DTR (EDH)" commands to access a fixed length of 8/16/32/64-byte section within a 256-byte page in standard SPI mode. The Set Burst with Wrap command sequence: CS# goes low →Send Set Burst with Wrap command →Send 24 dummy bits →Send 8 bits "Wrap bits"→CS# goes high

W6,W5	W4=0		W4=1(default)	
	Wrap Around	Wrap Length	Wrap Around	Wrap Length
0,0	Yes	8-byte	No	N/A
0,1	Yes	16-byte	No	N/A
1,0	Yes	32-byte	No	N/A
1,1	Yes	64-byte	No	N/A

If the W6-W4 bits are set by the Set Burst with Wrap command, all the following "Quad I/O Fast Read (EBH)" and "Quad I/O Word Fast Read (E7H)" and "Quad Read under DTR (EDH)" command will use the W6-W4 setting to access the 8/16/32/64-byte section within any page. To exit the "Wrap Around" function and return to normal read operation, another Set Burst with Wrap command should be issued to set W4=1.

In QPI mode, the "Burst Read with Wrap (0CH)" command should be used to perform the Read Operation with "Wrap Around" feature. The Wrap Length set by W5-W6 in Standard SPI mode is still valid in QPI mode and can also be re-configured by "Set Read Parameters (C0H) command.

Figure 42. Set Burst with Wrap Sequence Diagram

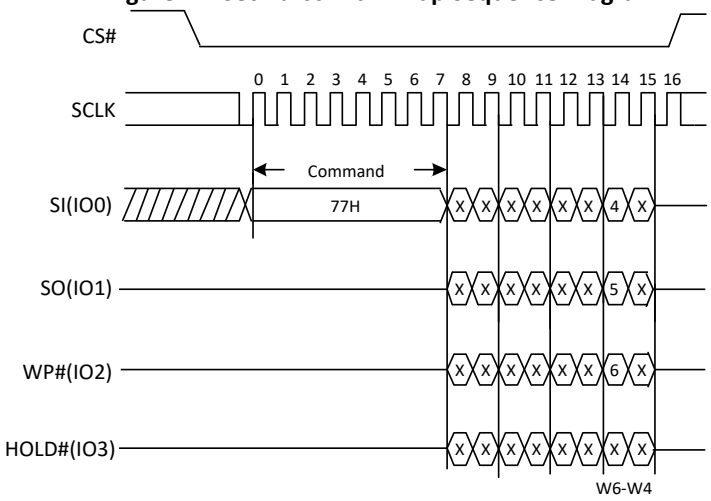

5.13.2. Set Read Parameters(C0H)

In QPI mode, to accommodate a wide range of applications with different needs for either maximum read-frequency or minimum data access latency, "Set Read Parameters (C0H)" instruction can be used to configure the number of dummy clocks for "Fast Read (0BH)", "Fast Read Quad I/O (EBH)" & "Burst Read with Wrap (0CH)" instructions, and to configure the number of bytes of "Wrap Length" for the "Burst Read with Wrap (0CH)" instruction. In Standard SPI mode, the "Set Read Parameters (C0h)" instruction is not accepted.

The dummy clocks for various Fast Read instructions in Standard/Dual/Quad SPI mode are fixed and will remain unchanged when the device is switched from Standard SPI mode to QPI mode and requires to be set again, prior to any 0Bh, EBh or 0Ch instructions. When the device is switched from QPI mode to SPI mode, the number of dummy clocks goes back to default.

The default "Wrap Length" after a power up or a Reset instruction is 8 bytes, the default number of dummy clocks is 8. The "Wrap Length" is set by W6-4 bit in the "Set Burst with Wrap (77h)" instruction in Standard SPI mode and by P1-P0 in the "Set Read Parameters (C0H)" in the QPI mode. The Wrap Length set by P1-P0 in QPI

mode is still valid in SPI mode and can also be re-configured by “Set Burst with Wrap (77h)”.

P5-P4	Dummy Clocks	Maximum Read Freq.	P1-P0	Wrap Length
0 0	4	80MHz	0 0	8-byte
0 1	4	80MHz	0 1	16-byte
1 0	6	108MHz	1 0	32-byte
1 1 (Default)	8	108MHz	1 1	64-byte

Figure 43. Set Read Parameters command Sequence Diagram

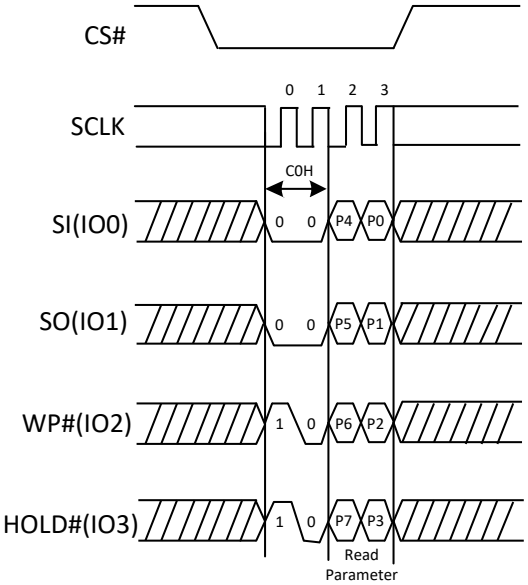

5.13.3. Burst Read With Wrap(0CH)

The “Burst Read with Wrap (0CH)” command provides an alternative way to perform the read operation with “Wrap Around” in QPI mode. This command is similar to the “Fast Read (0BH)” command in QPI mode, except the addressing of the read operation will “Wrap Around” to the beginning boundary of the “Wrap Around” once the ending boundary is reached. The “Wrap Length” and the number of dummy clocks can be configured by the “Set Read Parameters (C0H)” command.

Figure 44. Burst Read with Wrap command Sequence Diagram

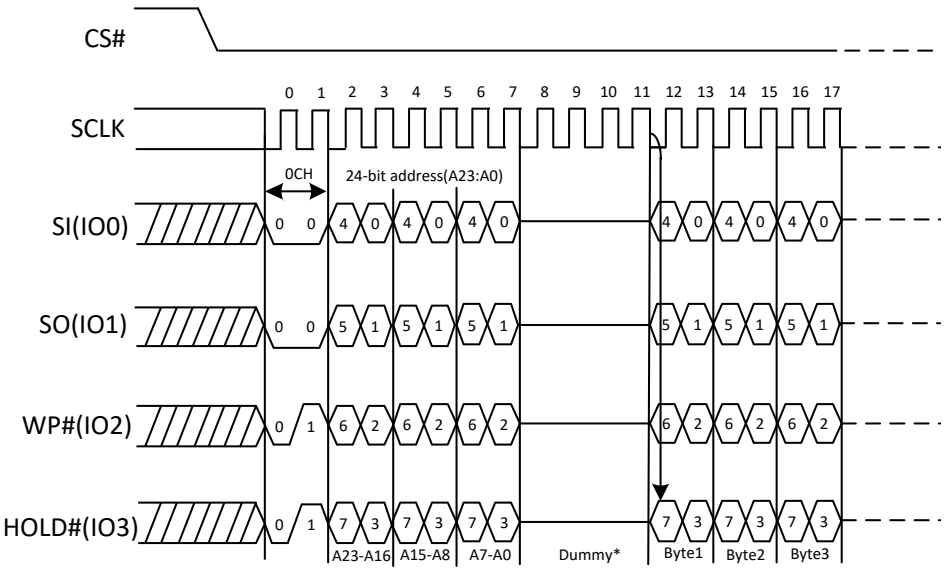

Table 3. Parameter Table (0): Signature and Parameter Identification Data Values

Description	Comment	Add(H) (Byte)	DW Add (Bit)	Data	Data
SFDP Signature	Fixed:50444653H	00H	07:00	53H	53H
		01H	15:08	46H	46H
		02H	23:16	44H	44H
		03H	31:24	50H	50H
SFDP Minor Revision Number	Start from 00H	04H	07:00	01H	01H
SFDP Major Revision Number	Start from 01H	05H	15:08	02H	02H
Number of Parameters Headers	Start from 00H	06H	23:16	02H	02H
Unused	Contains 0xFFH and can never be changed	07H	31:24	FFH	FFH
ID number (JEDEC)	00H: It indicates a JEDEC specified header	08H	07:00	00H	00H
Parameter Table Minor Revision Number	Start from 0x00H	09H	15:08	01H	01H
Parameter Table Major Revision Number	Start from 0x01H	0AH	23:16	02H	02H
Parameter Table Length (in double word)	How many DWORDs in the Parameter table	0BH	31:24	10H	10H
Parameter Table Pointer (PTP)	First address of JEDEC Flash Parameter table	0CH	07:00	30H	30H
		0DH	15:08	00H	00H
		0EH	23:16	00H	00H
Unused	Contains 0xFFH and can never be changed	0FH	31:24	FFH	FFH
ID Number (XTX Manufacturer ID)	It is indicates XTX manufacturer ID	10H	07:00	0BH	0BH
Parameter Table Minor Revision Number	Start from 0x00H	11H	15:08	01H	01H
Parameter Table Major Revision Number	Start from 0x01H	12H	23:16	01H	01H
Parameter Table Length (in double word)	How many DWORDs in the Parameter table	13H	31:24	03H	03H
Parameter Table Pointer (PTP)	First address of XTX Flash Parameter table	14H	07:00	90H	90H
		15H	15:08	00H	00H
		16H	23:16	00H	00H
Unused	Contains 0xFFH and can never be changed	17H	31:24	FFH	FFH

Parameter Table (1): JEDEC Flash Parameter Tables

Description	Comment	Add(H) (Byte)	DW Add (Bit)	Data	Data
Block/Sector Erase Size	00: Reserved; 01: 4KB erase; 10: Reserved; 11: not support 4KB erase	30H	01:00	01b	E5H
Write Granularity	0: 1Byte, 1: 64Byte or larger		02	1b	
Write Enable Instruction Requested for Writing to Volatile Status Registers	0: Nonvolatile status bit 1: Volatile status bit (BP status register bit)		03	0b	
Write Enable Opcode Select for Writing to Volatile Status Registers	0: Use 50H Opcode, 1: Use 06H Opcode, Note: If target flash status register is Nonvolatile, then bits 3 and 4 must be set to 00b.		04	0b	
Unused	Contains 111b and can never be changed		07:05	111b	
4KB Erase Opcode	If not support 4KB, set to FFH	31H	15:08	20H	20H
(1-1-2) Fast Read	0=Not support, 1=Support	32H	16	1b	F9H
Address Bytes Number used in addressing flash array	00: 3Byte only, 01: 3 or 4Byte, 10: 4Byte only, 11: Reserved		18:17	00b	
Double Transfer Rate (DTR) clocking	0=Not support, 1=Support		19	1b	
(1-2-2) Fast Read	0=Not support, 1=Support		20	1b	
(1-4-4) Fast Read	0=Not support, 1=Support		21	1b	
(1-1-4) Fast Read	0=Not support, 1=Support		22	1b	
Unused			23	1b	
Unused		33H	31:24	FFH	FFH
Flash Memory Density		37H:34H	31:00	00FFFFFFH	
(1-4-4) Fast Read Number of Wait states	0 0000b: Wait states (Dummy Clocks) not support (M7-M0 excluded)	38H	04:00	00100b	44H
(1-4-4) Fast Read Number of Mode Bits	000b:Mode Bits not support		07:05	010b	
(1-4-4) Fast Read Opcode		39H	15:08	EBH	EBH
(1-1-4) Fast Read Number of Wait states	0 0000b: Wait states (Dummy Clocks) not support	3AH	20:16	01000b	08H
(1-1-4) Fast Read Number of Mode Bits	000b:Mode Bits not support		23:21	000b	
(1-1-4) Fast Read Opcode		3BH	31:24	6BH	6BH

Description	Comment	Add(H) (Byte)	DW Add (Bit)	Data	Data
(1-1-2) Fast Read Number of Wait states	0 0000b: Wait states (Dummy Clocks) not support	3CH	04:00	01000b	08H
(1-1-2) Fast Read Number of Mode Bits	000b: Mode Bits not support		07:05	000b	
(1-1-2) Fast Read Opcode		3DH	15:08	3BH	3BH
(1-2-2) Fast Read Number of Wait states	0 0000b: Wait states (Dummy Clocks) not support (M7-M0 excluded)	3EH	20:16	00000b	40H
(1-2-2) Fast Read Number of Mode Bits	000b: Mode Bits not support		23:21	010b	
(1-2-2) Fast Read Opcode		3FH	31:24	BBH	BBH
(2-2-2) Fast Read	0=not support 1=support	40H	00	0b	FEH
Unused			03:01	111b	
(4-4-4) Fast Read	0=not support 1=support		04	1b	
Unused			07:05	111b	
Unused		43H:41H	31:08	0xFFH	0xFFH
Unused		45H:44H	15:00	0xFFH	0xFFH
(2-2-2) Fast Read Number of Wait states	0 0000b: Wait states (Dummy Clocks) not support	46H	20:16	00000b	00H
(2-2-2) Fast Read Number of Mode Bits	000b: Mode Bits not support		23:21	000b	
(2-2-2) Fast Read Opcode		47H	31:24	FFH	FFH
Unused		49H:48H	15:00	0xFFH	0xFFH
(4-4-4) Fast Read Number of Wait states	0 0000b: Wait states (Dummy Clocks) not support (M7-M0 included)	4AH	20:16	01000b	48H
(4-4-4) Fast Read Number of Mode Bits	000b: Mode Bits not support		23:21	010b	
(4-4-4) Fast Read Opcode		4BH	31:24	EBH	EBH
Sector Type 1 Size	Sector/block size=2^N Bytes 0x00b: this sector type don't exist	4CH	07:00	0CH	0CH
Sector Type 1 erase Opcode		4DH	15:08	20H	20H
Sector Type 2 Size	Sector/block size=2^N Bytes 0x00b: this sector type don't exist	4EH	23:16	0FH	0FH
Sector Type 2 erase Opcode		4FH	31:24	52H	52H
Sector Type 3 Size	Sector/block size=2^N Bytes 0x00b: this sector type don't exist	50H	07:00	10H	10H
Sector Type 3 erase Opcode		51H	15:08	D8H	D8H
Sector Type 4 Size	Sector/block size=2^N Bytes 0x00b: this sector type don't exist	52H	23:16	00H	00H
Sector Type 4 erase Opcode		53H	31:24	FFH	FFH

Description	Comment	Add(H) (Byte)	DW Add (Bit)	Data	Data
Multiplier from typical erase time to maximum erase time		54H	3:0	0111b	FEA5 3A27H
Erase Type 1 Erase, Typical time	Erase time=40ms/48ms		8:4	00010b	
		55H	10:9	01b	
Erase Type 2 Erase, Typical time	Erase time=120ms/128ms		15:11	00111b	
		56H	17:16	01b	
Erase Type 3 Erase, Typical time	Erase time=150ms/160ms		22:18	01001b	
		57H	24:23	01b	
Erase Type 4 Erase, Typical time	Not exist		31:25	1111111b	
Multiplier from typical time to max time for Page or Byte program		58H	3:0	0100b	84H
Page Size	Page size=256Byte		7:4	1000b	
Page Program Typical time	Page program=350us/384us	59H	13:8	100101b	25H
Byte Program Typical time, first Byte	First Byte program=25us/24us		15:14	00b	
		5AH	18:16	110b	16H
Byte Program Typical time, additional Byte	Additional Byte program=2.5us/3us		23:19	00010b	
Chip Erase, Typical time	Chip erase typical time=4.5s/5.12s	5BH	30:24	0110011b	33H
Reserved			31	0b	
Prohibited Operations During Program Suspend		5CH	3:0	1000b	A8H
Prohibited Operations During Erase Suspend			7:4	1010b	
Reserved		5DH	8	0b	60H
Program Resume to Suspend Interval	Interval=64us		12:9	0000b	
Suspend in-progress program max latency	max latency=20us/20us		15:13	011b	
		5EH	19:16	0110b	06H
Erase Resume to Suspend Interval	Interval=64us		23:20	0000b	
Suspend in-progress erase max latency	max latency=20us/20us	5FH	30:24	0110011b	33H
Suspend / Resume supported	0=support 1=not support		31	0b	
Program Resume Instruction		60H	7:0	7AH	7AH
Program Suspend Instruction		61H	15:0	75H	75H
Resume Instruction		62H	23:16	7AH	7AH
Suspend Instruction		63H	31:24	75H	75H

Description	Comment	Add(H) (Byte)	DW Add (Bit)	Data	Data
Reserved		64H	1:0	00b	04H
Status Register Polling Device Busy	Use of legacy polling is supported by reading the Status Register with 05h instruction and checking WIP bit[0] (0=ready; 1=busy).		7:2	000001b	
Exit Deep Power-Down to next operation delay	Delay=3us/3us	65H	14:8	0100011b	A3H
Exit Deep Power-Down Instruction	ABH		15	1b	
		66H	22:16	1010101b	D5H
Enter Deep Power-Down Instruction	B9H		23	1b	
		67H	30:24	1011100b	5CH
Deep Power-Down Supported	0=support 1=not support		31	0b	
4-4-4 mode disable sequences	Issue FFH or 66/99H, set 1001b If QPI not supported, set all bit to 0;	68H	3:0	1001b	19H
4-4-4 mode enable sequences	Support QE and 38H, set 0 0011b If QPI not supported, set all bit to 0;		7:4	0001b	
		69H	8	0b	06H
0-4-4 mode supported	1=support 0=not support		9	1b	
0-4-4 Mode Exit Method	M<7:0>=00H		15:10	000001b	
0-4-4 Mode Entry Method	M<7:0>=AXH	6AH	19:16	0100b	C4H
Quad Enable Requirements (QER)	QE is in status register 2, bit 1		22:20	100b	
RESET Disable	1=support 0=not support		23	1b	
Reserved		6BH	31:24	00000000b	00H
Volatile or Non-Volatile Register and Write Enable Instruction for Status Register 1		6CH	6:0	0001000b	08H
Reserved			7	0b	
Soft Reset and Rescue Sequence Support	66H-99H	6DH	13:8	010000b	50H
Exit 4-Byte Addressing	Reserved		15:14	01b	
		6EH	23:16	10000000b	80H
Enter 4-Bye Addressing	Reserved	6FH	31:24	10000000b	80H

Parameter Table (2): XTX Flash Parameter Tables

Description	Comment	Add(H) (Byte)	DW Add (Bit)	Data	Data
Vcc Supply Maximum Voltage	2100H=2.100V 2700H=2.700V 3600H=3.600V	91H:90H	15:00	2100H	2100H
Vcc Supply Minimum Voltage	1650H=1.650V 2250H=2.250V 2350H=2.350V 2700H=2.700V	93H:92H	31:16	1650H	1650H
HW Reset# pin	0=not support 1=support	95H:94H	00	1b	F99FH
HW Hold# pin	0=not support 1=support		01	1b	
Deep Power-Down Mode	0=not support 1=support		02	1b	
SW Reset	0=not support 1=support		03	1b	
SW Reset Opcode	Should be issue Reset Enable(66H) before Reset cmd.		11:04	1001 1001b (99H)	
Program Suspend/Resume	0=not support 1=support		12	1b	
Erase Suspend/Resume	0=not support 1=support		13	1b	
Unused			14	1b	
Wrap-Around Read mode	0=not support 1=support		15	1b	
Wrap-Around Read mode Opcode		96H	23:16	77H	77H
Wrap-Around Read data length	08H:support 8B wrap-around read 16H:8B&16B 32H:8B&16B&32B 64H:8B&16B&32B&64B	97H	31:24	64H	64H
Individual block lock	0=not support 1=support	9BH:98H	00	1b	E8D9H
Individual block lock bit (Volatile/Nonvolatile)	0=Volatile 1=Nonvolatile		01	0b	
Individual block lock Opcode			09:02	36H	
Individual block lock Volatile protect bit default protect status	0=protect 1=unprotect		10	0b	
Secured OTP	0=not support 1=support		11	1b	
Read Lock	0=not support 1=support		12	0b	
Permanent Lock	0=not support 1=support		13	1b	
Unused			15:14	11b	
Unused			31:16	FFFFH	FFFFH

6. ELECTRICAL CHARACTERISTICS

6.1. Power-on Timing

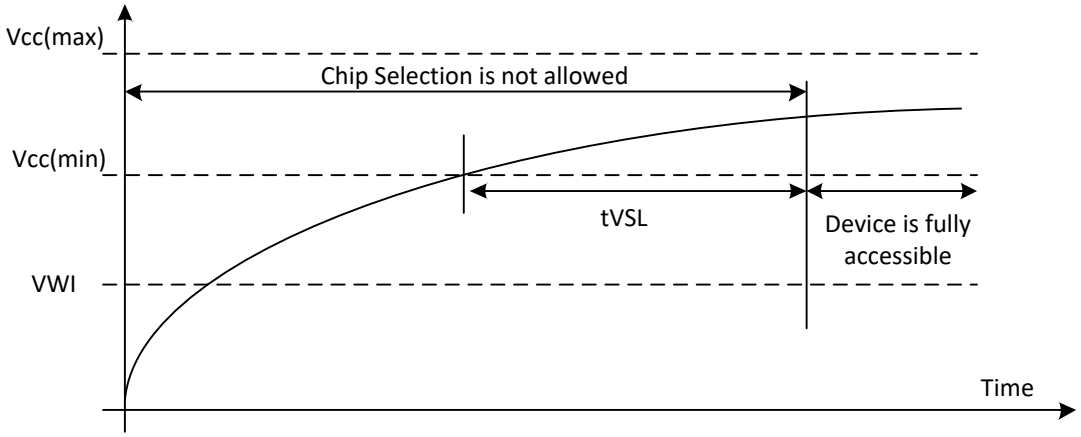

Power-Up Timing and Write Inhibit Threshold

Symbol	Parameter	Min	Max	Unit
t_{VSL}	VCC(min) To CS# Low	200		us
V_{WI}	Write Inhibit Voltage	-	1.5	V

6.2. Initial Delivery State

The device is delivered with the memory array erased: all bits are set to 1(each byte contains FFH). All Status Register bits except S22 bit are 0, S22 bit is 1.

6.3. Latch up Characteristics

Parameter	Min	Max
Input Voltage Respect To VSS On I/O Pins	-1.0V	VCC+1.0V
VCC Current	-100mA	100mA

6.4. Absolute Maximum Ratings

Parameter	Value	Unit
Ambient Operating Temperature	-40 to 85 -40 to 105	℃
Storage Temperature	-65 to 150	℃
Output Short Circuit Current	200	mA
Applied Input/Output Voltage	-0.5 to 4.0	V
VCC	-0.5 to 4.0	V

6.5. Capacitance Measurement Condition

Symbol	Parameter	Min	Typ	Max	Unit	Conditions
CIN	Input Capacitance			6	pF	VIN=0V
COUT	Output Capacitance			8	pF	VOUT=0V
CL	Load Capacitance		30		pF	
	Input Rise And Fall time			5	ns	
	Input Pulse Voltage		0.1VCC to 0.8VCC		V	
	Input Timing Reference Voltage		0.2VCC to 0.7VCC		V	
	Output Timing Reference Voltage		0.5VCC		V	

Input Test Waveform and Measurement Level

Maximum Negative Overshoot Waveform

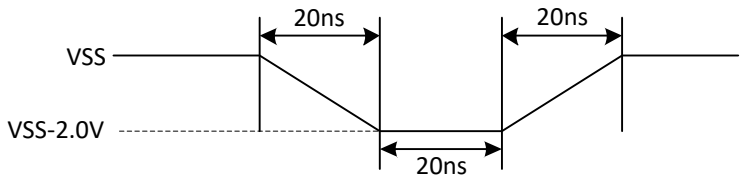

Maximum Positive Overshoot Waveform

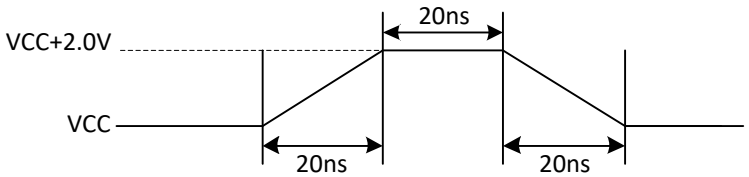

6.6. DC Characteristics

(T=-40℃~85℃,VCC=1.65~2.1V)

Symbol	Parameter	Test Condition	Min.	Typ	Max.	Unit
I_{LI}	Input Leakage Current				±2	µA
I_{LO}	Output Leakage Current				±2	µA
I_{CC1}	Standby Current	CS#=VCC VIN=VCC or VSS		12	25	µA
I_{CC2}	Deep Power-Down Current	CS#=VCC VIN=VCC or VSS		0.3	5	µA
I_{CC3}	Operating Current(Read)	CLK=0.1VCC/0.9VCC at 108MHz, Q=Open(*1,*2,*4 I/O)		10	18	mA
		CLK=0.1VCC/0.9VCC at 80MHz, Q=Open(*1,*2,*4 I/O)		7	14	mA
		CLK=0.1VCC/0.9VCC at 48MHZ, Q=Open(*1,*2,*4 I/O)		5	11	mA
I_{CC5}	Operating Current(PP)	CS#=VCC		15	20	mA
I_{CC6}	Operating Current(WRSR)	CS#=VCC		10	20	mA
I_{CC7}	Operating Current(SE)	CS#=VCC		10	20	mA
I_{CC8}	Operating Current(BE/CE)	CS#=VCC		15	20	mA
V_{IL}	Input Low Voltage		-0.5		0.2VCC	V
V_{IH}	Input High Voltage		0.7VCC		VCC+0.4	V
V_{OL}	Output Low Voltage	IOL=1.6mA			0.4	V
V_{OH}	Output High Voltage	IOH=-100uA	VCC-0.2			V

Note:
1. Typical values given for TA=25°C, VCC = 1.8V.
2. Value guaranteed by design and/or characterization, not 100% tested in production.

(T=-40℃~105℃,VCC=1.65~2.1V)

Symbol	Parameter	Test Condition	Min.	Typ	Max.	Unit
I_{LI}	Input Leakage Current				±2	µA
I_{LO}	Output Leakage Current				±2	µA
I_{CC1}	Standby Current	CS#=VCC VIN=VCC or VSS		12	35	µA
I_{CC2}	Deep Power-Down Current	CS#=VCC VIN=VCC or VSS		0.3	8	µA
I_{CC3}	Operating Current(Read)	CLK=0.1VCC/0.9VCC at 108MHz, Q=Open(*1,*2,*4 I/O)		10	23	mA
		CLK=0.1VCC/0.9VCC at 80MHz, Q=Open(*1,*2,*4 I/O)		7	18	mA
		CLK=0.1VCC/0.9VCC at 48MHZ, Q=Open(*1,*2,*4 I/O)		5	12	mA
I_{CC5}	Operating Current(PP)	CS#=VCC		15	30	mA
I_{CC6}	Operating Current(WRSR)	CS#=VCC		10	30	mA
I_{CC7}	Operating Current(SE)	CS#=VCC		10	30	mA
I_{CC8}	Operating Current(BE/CE)	CS#=VCC		15	30	mA
V_{IL}	Input Low Voltage		-0.5		0.2VCC	V
V_{IH}	Input High Voltage		0.7VCC		VCC+0.4	V
V_{OL}	Output Low Voltage	IOL=1.6mA			0.4	V
V_{OH}	Output High Voltage	IOH=-100uA	VCC-0.2			V

Note:
1. Typical values given for TA=25°C, VCC = 1.8V.
2. Value guaranteed by design and/or characterization, not 100% tested in production.

6.7. AC Characteristics

(T=-40℃~85℃,VCC=1.65~2.1V，CL=30pF)

Symbol	Parameter	Min.	Typ.	Max.	Unit
fC1	Serial Clock Frequency For: all commands in STR except Read (03H)	D.C.		108	MHz
fC2	Serial Clock Frequency For: DTR instructions	D.C.		86	MHz
fR	Serial Clock Frequency for Read Data(03H)	D.C.		80	MHz
tCLH(1)	Serial Clock High Time	45%PC			ns
tCLL(1)	Serial Clock Low Time	45%PC			ns
tCLCH	Serial Clock Rise Time(Slew Rate)	0.2			V/ns
tCHCL	Serial Clock Fall Time(Slew Rate)	0.2			V/ns
tSLCH	CS# Active Setup Time	5			ns
tCHSH	CS# Active Hold Time	5			ns
tSHCH	CS# Not Active Setup Time	5			ns
tCHSL	CS# Not Active Hold Time	5			ns
tSHSL	CS# High Time (read/write)	20			ns
tSHQZ	Output Disable Time			8	ns
tCLQV	Clock Low To Output Valid			5.5	ns
tCLQX	Output Hold Time	1.2			ns
tDVCH	Data In Setup Time	3			ns
tCHDX	Data In Hold Time	2			ns
tHLCH	Hold# Low Setup Time(relative to Clock)	5			ns
tHHCH	Hold# High Setup Time(relative to Clock)	5			ns
tCHHL	Hold# High Hold Time(relative to Clock)	5			ns
tCHHH	Hold# Low Hold Time(relative to Clock)	5			ns
tHLQZ	Hold# Low To High-Z Output			6	ns
tHHQX	Hold# High To Low-Z Output			6	ns
tWHSL	Write Protect Setup Time Before CS# Low	20			ns
tSHWL	Write Protect Hold Time After CS# High	100			ns
tDP	CS# High To Deep Power-Down Mode			3	us
tRES1	CS# High To Standby Mode Without Electronic Signature Read			3	us
tRES2	CS# High To Standby Mode With Electronic Signature Read			3	us
tRST	CS# High To Next Command After Reset			6	us
tSUS	CS# High To Next Command After Suspend			20	us
tRS	Latency Between Resume And Next Suspend	120			us
tWRSR	Write Status Register Cycle Time		0.8	10	ms
tPP	Page Programming Time		0.35	1	ms
tBP	Byte Programming Time (First Byte)		25	50	us
tBP	Byte Programming Time (After First Byte)		2.5	5	us
tSE	Sector Erase Time		40	700	ms
tBE1	Block Erase Time(32K Bytes)		0.12	1.6	s

tBE2	Block Erase Time(64K Bytes)		0.15	3.5	s
tCE	Chip Erase Time		4.5	10	s

Note:
1. Clock high or Clock low must be more than or equal to 45%PC. PC=1/fC(MAX).
2. Typical values given for TA=25°C. Value guaranteed by design and/or characterization, not 100% tested in production.

(T=-40℃~105℃,VCC=1.65~2.1V，CL=30pF)

Symbol	Parameter	Min.	Typ.	Max.	Unit
fC1	Serial Clock Frequency For: all commands in STR except Read (03H)	D.C.		104	MHz
fC2	Serial Clock Frequency For: DTR instructions	D.C.		86	MHz
fR	Serial Clock Frequency for Read Data(03H)	D.C.		80	MHz
tCLH(1)	Serial Clock High Time	45%PC			ns
tCLL(1)	Serial Clock Low Time	45%PC			ns
tCLCH	Serial Clock Rise Time(Slew Rate)	0.2			V/ns
tCHCL	Serial Clock Fall Time(Slew Rate)	0.2			V/ns
tSLCH	CS# Active Setup Time	5			ns
tCHSH	CS# Active Hold Time	5			ns
tSHCH	CS# Not Active Setup Time	5			ns
tCHSL	CS# Not Active Hold Time	5			ns
tSHSL	CS# High Time (read/write)	20			ns
tSHQZ	Output Disable Time			8	ns
tCLQV	Clock Low To Output Valid			5.5	ns
tCLQX	Output Hold Time	1.2			ns
tDVCH	Data In Setup Time	3			ns
tCHDX	Data In Hold Time	2			ns
tHLCH	Hold# Low Setup Time(relative to Clock)	5			ns
tHHCH	Hold# High Setup Time(relative to Clock)	5			ns
tCHHL	Hold# High Hold Time(relative to Clock)	5			ns
tCHHH	Hold# Low Hold Time(relative to Clock)	5			ns
tHLQZ	Hold# Low To High-Z Output			6	ns
tHHQX	Hold# High To Low-Z Output			6	ns
tWHSL	Write Protect Setup Time Before CS# Low	20			ns
tSHWL	Write Protect Hold Time After CS# High	100			ns
tDP	CS# High To Deep Power-Down Mode			3	us
tRES1	CS# High To Standby Mode Without Electronic Signature Read			3	us
tRES2	CS# High To Standby Mode With Electronic Signature Read			3	us
tRST	CS# High To Next Command After Reset			6	us
tSUS	CS# High To Next Command After Suspend			20	us
tRS	Latency Between Resume And Next Suspend	120			us
tWRSR	Write Status Register Cycle Time		0.8	10	ms
tPP	Page Programming Time		0.35	1	ms
tBP	Byte Programming Time (First Byte)		25	50	us
tBP	Byte Programming Time (After First Byte)		2.5	5	us
tSE	Sector Erase Time		40	700	ms
tBE1	Block Erase Time(32K Bytes)		0.12	2	s
tBE2	Block Erase Time(64K Bytes)		0.15	4.3	s

tCE	Chip Erase Time		4.5	10	s

Note:
1. Clock high or Clock low must be more than or equal to 45%PC. PC=1/fC(MAX).
2. Typical values given for TA=25°C. Value guaranteed by design and/or characterization, not 100% tested in production.

Serial Input Timing

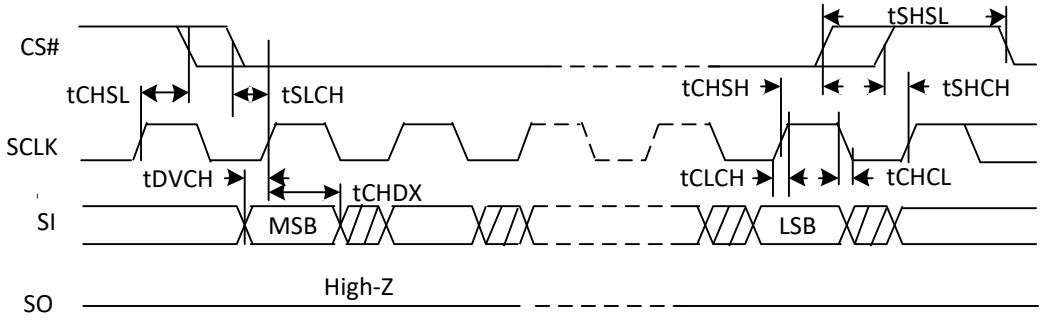

Output Timing

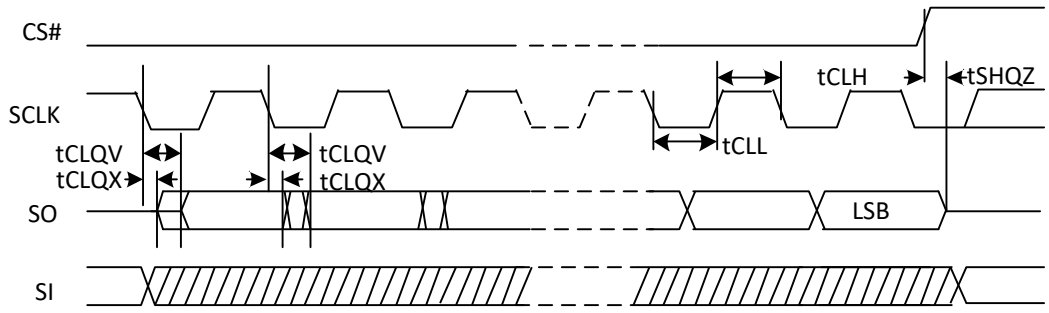

Least significant address bit (LSB) in

Hold Timing

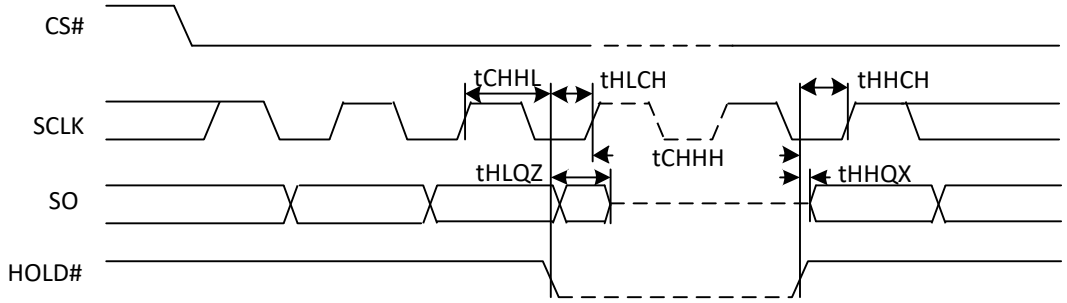

SI do not care during HOLD operation

Resume to Suspend Timing Diagram

7. ORDERING INFORMATION

The ordering part number is formed by a valid combination of the following

XT 25Q 16D SO I G U

Company Prefix

XT = XTX

Product Family

25Q = 1.65~2.1V Serial Flash Memory
with 4KB Uniform-Sector

Product Density

16D = 16Mbit

Product Package

SO = 8-pin SOP8 (150mil)
DT = 8-pad DFN8 (2x3x0.4mm)

Temperature & Moisture Sensitivity Level

I = Industrial Level Temp. (-40℃ to +85℃), MSL3
H = Industrial Plus Level Temp. (-40℃ to +105℃), MSL3

Green Code

G = Green/Reach Package

Product Carrier

U = Tube; **T** = Tape & Reel; **A** = Tray

8. PACKAGE INFORMATION

8.1. Package SOP8 150MIL

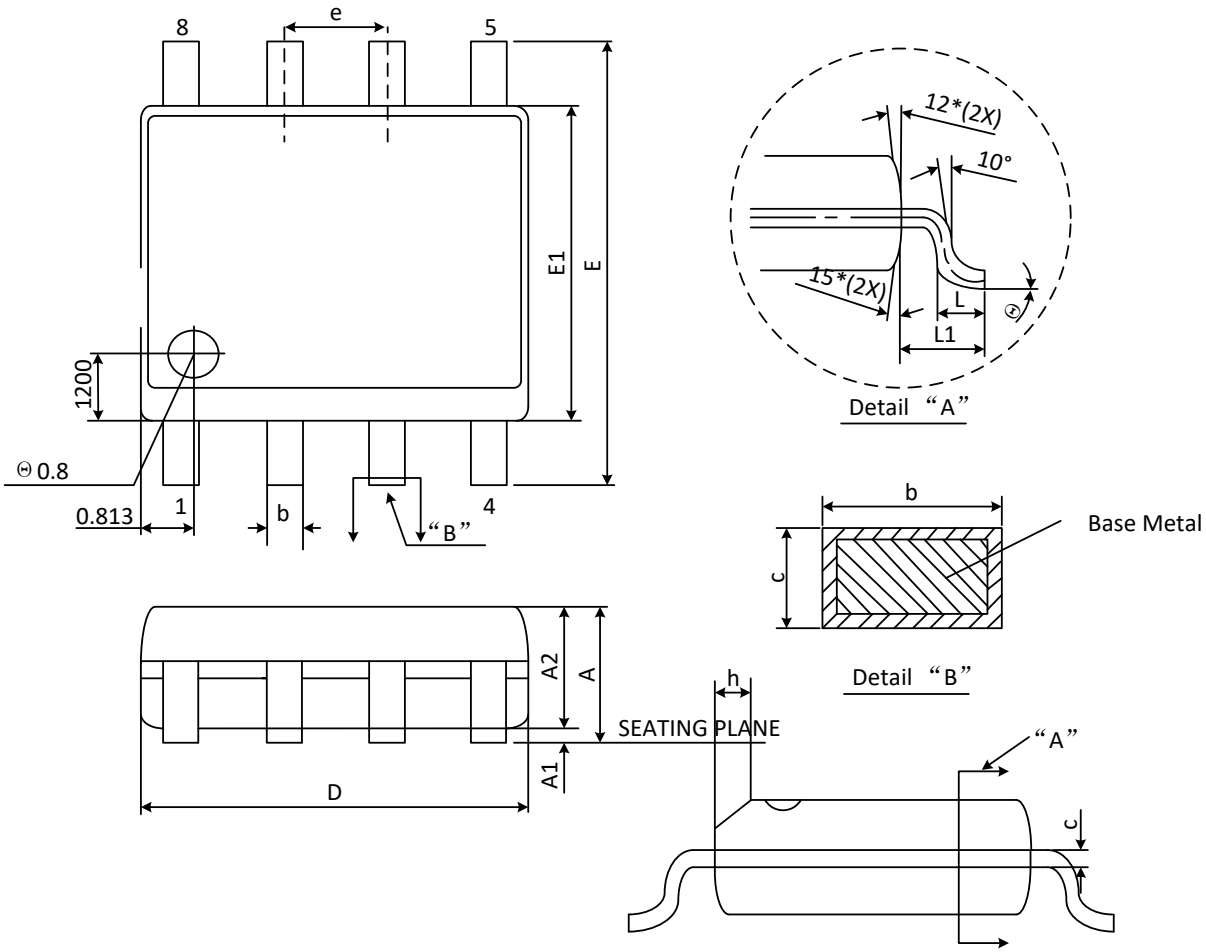

Symbol	Dimensions in Millimeters		
	Min	Norm	Max
A	1.350	----	1.750
A1	0.100	----	0.250
A2	1.300	----	1.500
b	0.330	----	0.510
c	0.190	----	0.250
D	4.700	4.900	5.000
E1	3.800	3.900	4.000
e	----	1.270	----
E	5.800	6.000	6.200
h	0.2500	0.350	0.500
L	0.508	0.635	0.762
L1	0.837	1.040	1.243
θ	0°	----	8°

Note:

1. Coplanarity: 0.1mm
2. Max allowable mold flash is 0.15mm at the package ends. 0.25mm between leads.
3. All dimensions follow JEDEC MS-012 standard.

8.2. Package DFN8 (2x3x0.4) mm

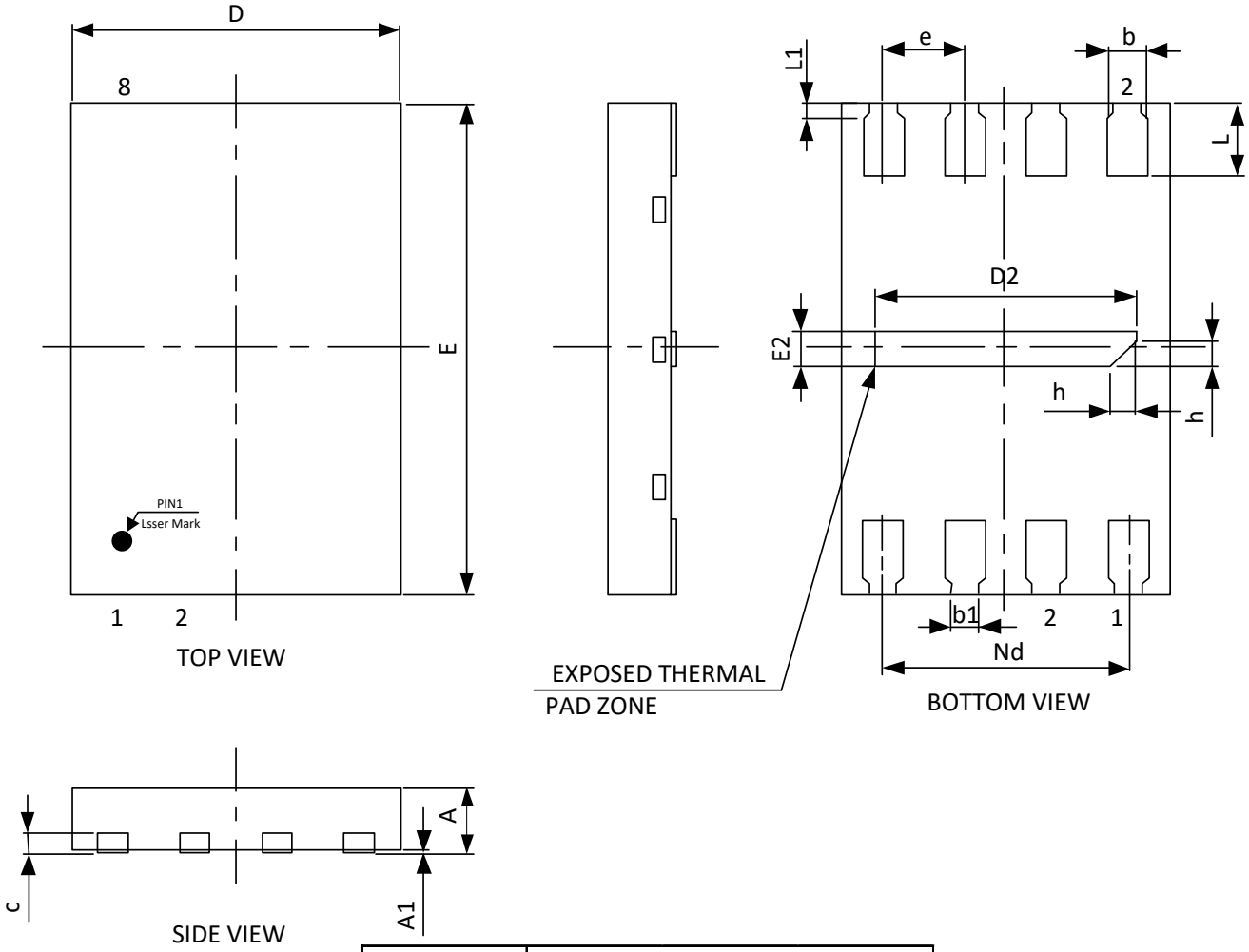

SYMBOL	MILLIMETER		
	MIN	NOM	MAX
A	0.36	—	0.40
A1	0	0.02	0.05
b	0.20	0.25	0.30
b1	0.15	0.20	0.25
c	0.127REF		
D	1.90	2.00	2.10
D2	1.5	1.6	1.7
e	0.50BSC		
Nd	1.50BSC		
E	2.90	3.00	3.10
E2	0.10	0.20	0.30
L	0.40	0.45	0.50
L1	0.05	0.10	0.15
h	0.05	0.15	0.25

9. REVISION HISTORY

Revision	Description	Date
1.0	Initial Version	Nov 30, 2020