XT25Q128F-W

Quad IO Serial NOR Flash

Datasheet

* Information furnished is believed to be accurate and reliable. However, XTX Technology Inc. assumes no re-sponsi-bility for the consequences of use of such information or for any infringement of patents of other rights of third parties which may result from its use. No license is granted by implication or otherwise under any patent rights of XTX Tech-nology Inc. Specifications mentioned in this publication are subjected to change without notice. This publication su-persedes and replaces all information previously supplied. XTX Technology Inc. products are not authorized for use as critical components in life support devices or systems without express written approval of XTX Technology Inc. The XTX logo is a registered trademark of XTX Technology Inc. All other names are the property of their respective own.

Serial NOR Flash Memory

1.8V Multi I/O with 4KB, 32KB & 64KB Sector/Block Erase

- **128M-bit Serial Flash**
  - 16, 384K-byte
  - 256 bytes per programmable page
- **Support SFDP & Unique ID**
- **Standard, Dual, Quad SPI, DTR**
  - Standard SPI: SCLK, CS#, SI, SO, WP#, HOLD#/RESET#
  - Dual SPI: SCLK, CS#, IO0, IO1, WP#, HOLD#/RESET#
  - Quad SPI: SCLK, CS#, IO0, IO1, IO2, IO3
  - QPI: SCLK, CS#, IO0, IO1, IO2, IO3
  - SPI/QPI DTR(Double Transfer Rate) Read
- **Flexible Architecture**
  - Sector of 4K-byte
  - Block of 32/64k-byte
- **Advanced security Features**
  - 3*1024-Byte Security Registers with OTP Lock
- **Support 128 bits Unique ID**
- **Software/Hardware Write Protection**
  - Write protect all/portion of memory via software
  - Enable/Disable protection with WP# Pin
  - Top or Bottom Block Protection
- **Erase/Program Suspend/Resume**
- **Package Options**
  - See 1.1 Available Ordering OPN
  - All Pb-free packages are compliant RoHS, Halogen-Free and REACH
- **Allows XIP(execute in place)operation**
  - High speed Read reduce overall XIP instruction fetch time
- **Continuous Read with 8/16/32/64-byte Wrap**
- **Temperature Range & Moisture Sensitivity Level**
  - Industrial Level Temperature. (-40°C to +85°C), MSL3
- **Low Power Consumption**
  - 0.2uA typ. Deep Power-Down current
- **Single Power Supply Voltage:**
  - 1.7~2.0V
- **Endurance and Data Retention**
  - Minimum 100,000 Program/Erase Cycle
  - 20-year Data Retention typical
- **High Speed Clock Frequency**
  - 104MHz for fast read with 30pF load
  - Dual I/O Data transfer up to 208Mbit/s
  - Quad I/O Data transfer up to 416Mbit/s
  - QPI Mode Data transfer up to 416Mbit/s
  - DTR Quad I/O Data transfer up to 640Mbit/s
- **Program/Erase Speed**
  - Page Program time: 0.35ms typical
  - Sector Erase time: 40ms typical
  - Block Erase time: 0.12s/0.2s typical
  - Chip Erase time: 40s typical

CONTENTS

1. GENERAL DESCRIPTION 4

1.1. AVAILABLE ORDERING PART NUMBERS (OPN) 4
1.2. CONNECTION DIAGRAM 5
1.3. PIN DESCRIPTION 5
1.4. BLOCK DIAGRAM 6

2. MEMORY ORGANIZATION 7

3. DEVICE OPERATION 8

3.1. SPI MODE 8
3.2. QPI MODE 8
3.3. DTR READ 8
3.4. HOLD FUNCTION 9
3.5. RESET FUNCTION 9
3.6. THE RESET SIGNALING PROTOCOL (JEDEC 252) 10

4. DATA PROTECTION 11

5. STATUS REGISTER 13

6. COMMANDS DESCRIPTION 16

6.1. REGISTER ACCESS 19
6.2. ARRAY ACCESS 26
6.3. DEVICE OPERATIONS 51
6.4. ONE-TIME PROGRAMMABLE (OTP) OPERATIONS 65

7. ELECTRICAL CHARACTERISTICS 70

7.1. POWER-ON TIMING 70
7.2. INITIAL DELIVERY STATE 70
7.3. ABSOLUTE MAXIMUM RATINGS 71
7.4. CAPACITANCE MEASUREMENT CONDITION 71
7.5. DC CHARACTERISTICS 72
7.6. AC CHARACTERISTICS 73

8. ORDERING INFORMATION 76

9. PACKAGE INFORMATION 77

9.1. PACKAGE SOP8 208MIL 77
9.2. PACKAGE WSON8 6X5MM 78

10. REVISION HISTORY 79

1. GENERAL DESCRIPTION

The XT25Q128F-W (128M-bit) Serial flash supports the standard Serial Peripheral Interface (SPI), and supports the Dual/Quad SPI: Serial Clock, Chip Select, Serial Data I/O0 (SI), I/O1 (SO), I/O2 (WP#), and I/O3 (HOLD#/RESET#).

1.1. Available Ordering Part Numbers (OPN)

OPN	Package Type	Package Carrier
XT25Q128FSSIGU-W	SOP8 208mil	Tube
XT25Q128FSSIGT-W	SOP8 208mil	Tape & Reel
XT25Q128FWOIGT-W	WSON8 6x5mm	Tape & Reel
XT25BQ128FWOIGT-W	WSON8 6x5mm	Tape & Reel

1.2. Connection Diagram

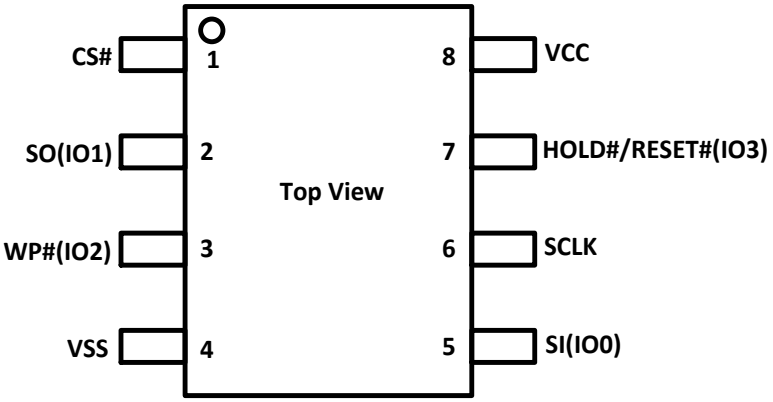

8-PIN SOP

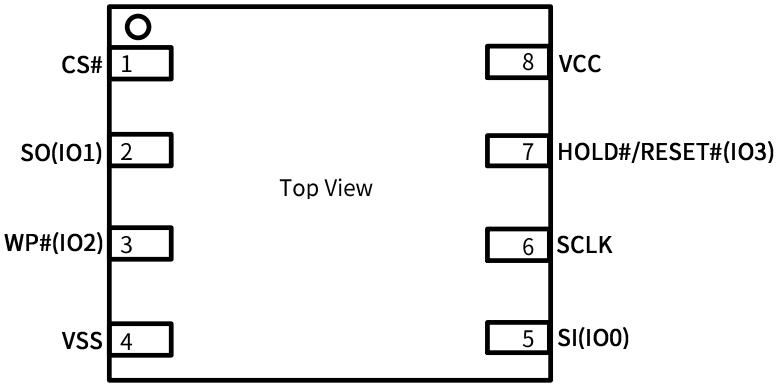

8-PIN WSON

1.3. Pin Description

Pin Name	I/O	Description
CS#	I	Chip Select Input
SO (IO1)	I/O	Data Output (Data Input Output 1)
WP# (IO2)	I/O	Write Protect Input (Data Input Output 2)
VSS		Ground
SI (IO0)	I/O	Data Input (Data Input Output 0)
SCLK	I	Serial Clock Input
HOLD#/RESET# (IO3)	I/O	Hold or Reset Input (Data Input Output 3)
VCC		Power Supply

Notes:

1. IO0 and IO1 are used for Standard and Dual SPI instructions.
2. IO0 – IO3 are used for Quad SPI instructions, WP# & HOLD# (or Reset#) functions are only available for Standard/Dual SPI.
3. There is an internal pull-up resistor for CS#, WP#(IO2) and HOLD#/RESET#(IO3) pins.

1.4. Block Diagram

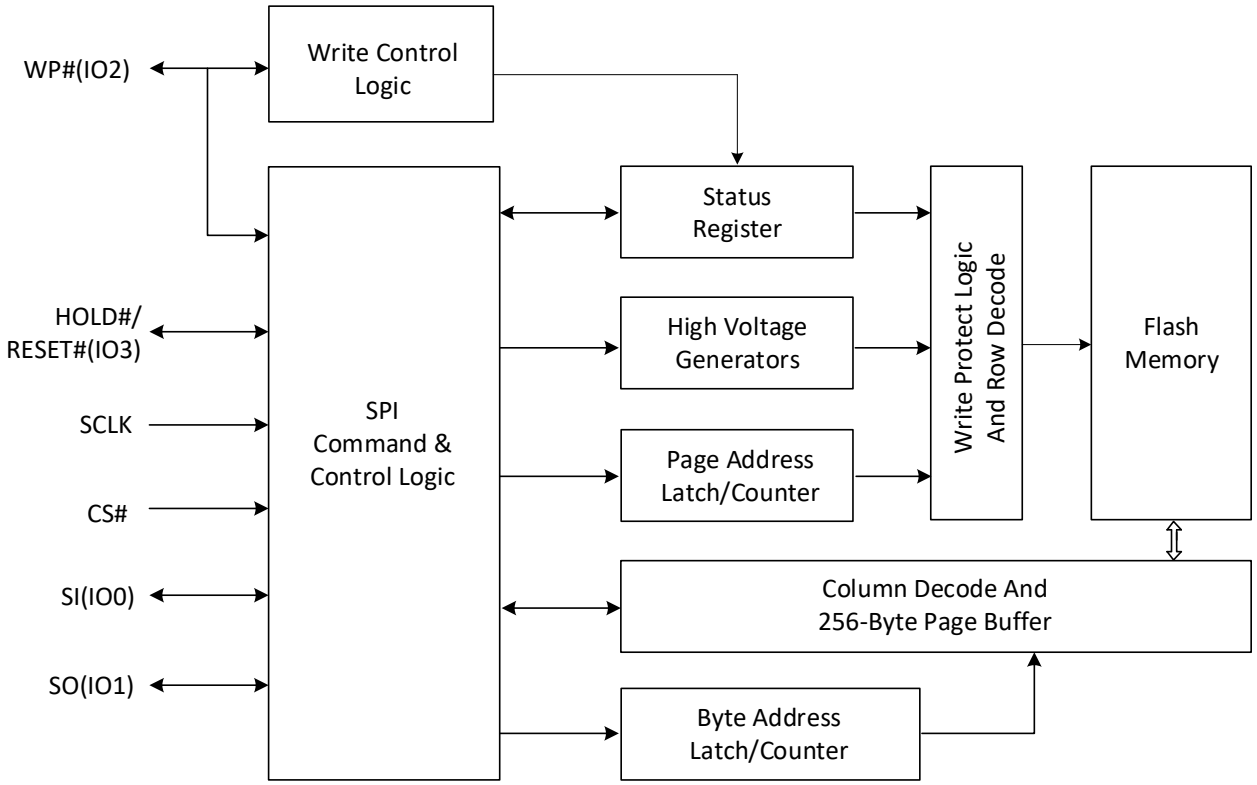

2. MEMORY ORGANIZATION

Uniform Block Sector Architecture

Block(64K-byte)	Block(32K-byte)	Sector(4K-byte)	Address Range	
255	511	4095	FFF000H	FFFFFFH
		……	……	……
		4088	FF8000H	FF8FFFH
	510	4087	FF7000H	FF7FFFH
		……	……	……
		4080	FF0000H	FF0FFFH
254	509	4079	FEF000H	FEFFFFH
		……	……	……
		4072	FE8000H	FE8FFFH
	508	4071	FE7000H	FE7FFFH
		……	……	……
		4064	FE0000H	FE0FFFH
	……	……	……	……
		……	……	……
		……	……	……
1	3	31	01F000H	01FFFFH
		……	……	……
		24	018000H	018FFFH
	2	23	017000H	017FFFH
		……	……	……
		16	010000H	010FFFH
0	1	15	00F000H	00FFFFH
		……	……	……
		8	008000H	008FFFH
	0	7	007000H	007FFFH
		……	……	……
		0	000000H	000FFFH

3. DEVICE OPERATION

3.1. SPI Mode

Standard SPI

The device features a serial peripheral interface on 4 signals bus: Serial Clock (SCLK), Chip Select (CS#), Serial Data Input (SI) and Serial Data Output (SO). Both SPI bus mode 0 and 3 are supported. Input data is latched on the rising edge of SCLK and data shifts out on the falling edge of SCLK.

Dual SPI

The device supports Dual SPI operation when using the “Dual Output Fast Read” and “Dual I/O Fast Read” (3BH and BBH) commands. These commands allow data to be transferred to or from the device at two times the rate of the standard SPI. When using the Dual SPI command the SI and SO pins become bidirectional I/O pins: IO0 and IO1.

Quad SPI

The device supports Quad SPI operation when using the “Quad Output Fast Read”, “Quad I/O Fast Read”, “DTR Fast Read Quad I/O” (6BH, EBH, EDH) commands. These commands allow data to be transferred to or from the device at four times the rate of the standard SPI. When using the Quad SPI command the SI and SO pins become bidirectional I/O pins: IO0 and IO1, and WP# and HOLD#/RESET# pins become IO2 and IO3. Quad SPI commands require the non-volatile Quad Enable bit (QE) in Status Register to be set.

3.2. QPI Mode

The device supports Quad Peripheral Interface (QPI) operations only when the device is switched from Standard/Dual/Quad SPI mode to QPI mode using the “Enable the QPI (38H)” command. The QPI mode utilizes all four IO pins to input the command code. Standard/Dual/Quad SPI mode and QPI mode are exclusive. Only one mode can be active at any given times. “Enable the QPI (38H)” and “Disable the QPI (FFH)” commands are used to switch between these two modes. Upon power-up and after software reset using “Enable Chip Reset (66H)” and “Reset (99H)” command, the default state of the device is Standard/Dual/Quad SPI mode. The QPI mode requires the non-volatile Quad Enable bit (QE) in Status Register to be set.

3.3. DTR Read

To effectively improve the read operation throughput without increasing the serial clock frequency, the device introduces multiple DTR (Double Transfer Rate) Read instructions that support Standard/Dual/Quad SPI and QPI modes. The byte-long instruction code is still latched into the device on the rising edge of the serial clock similar to all other SPI/QPI instructions. Once a DTR instruction code is accepted by the device, the address input and data output will be latched on both rising and falling edges of the serial clock.

3.4. Hold Function

The HOLD# signal goes low to stop any serial communications with the device, but doesn't stop the operation of write status register, programming, or erasing in progress.

The operation of HOLD, need CS# keep low, and starts on falling edge of the HOLD# signal, with SCLK signal being low (if SCLK is not being low, HOLD operation will not start until SCLK being low). The HOLD condition ends on rising edge of HOLD# signal with SCLK being low (If SCLK is not being low, HOLD operation will not end until SCLK being low).

The SO is high impedance, both SI and SCLK don't care during the HOLD operation, if CS# drives high during HOLD operation, it will reset the internal logic of the device. To re-start communication with chip, the HOLD# must be at high and then CS# must be at low.

Hold Condition

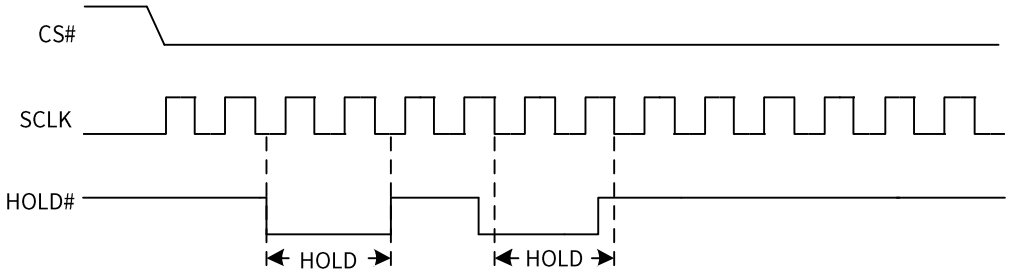

3.5. RESET Function

The RESET# pin allows the device to be reset by the control. The pin7 can be configured as a RESET# pin depending on the status register setting, which need QE=0 and HOLD/RST=1.

The RESET# pin goes low for a period of tRLRH or longer will reset the flash. After reset cycle, the flash is at the following states:

- Standby mode.
- All the volatile bits will return to the default status as power on.

Reset Timing

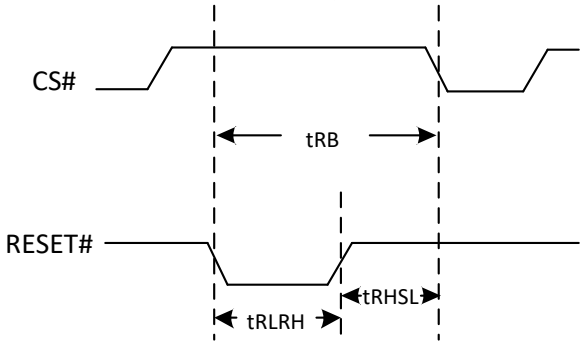

Symbol	Parameter	Min.	Typ.	Max.	Unit.
tRLRH	Reset Pulse Width	1			µs
tRHSL	Reset High Time Before Read	50			ns
tRB	Reset Recovery Time			12	ms

3.6. The Reset Signaling Protocol (JEDEC 252)

The protocol consists of two phases: reset request, and completion (a device internal reset).

Reset Request

1. CS# is driven active low to select the device [Note1]
2. Clock (SCLK) remains stable in either a high or low state [Note 2]
3. SI / IO0 is driven low by the bus master, simultaneously with CS# going active low [Note 3]
4. CS# is driven inactive [Note 4]

Repeat the steps 1-4 each time alternating the state of SI [Note 5]

NOTE 1 This powers up the device.

NOTE 2 This prevents any confusion with a command, as no command bits are transferred (clocked).

NOTE 3 No SPI bus slave drives SI during CS# low before a transition of SCK, i.e., slave streaming output active is not allowed until after the first edge of SCLK.

NOTE 4 The slave captures the state of SI on the rising edge of CS#.

NOTE 5 SI is low on the first CS#, high on the second, low on the third, high on the fourth (This provides a 5h pattern, to differentiate it from random noise).

Reset Completion

After the fourth CS# pulse, the slave triggers its internal reset.

Timing Diagram and Timing Parameters

Reset Signaling Protocol

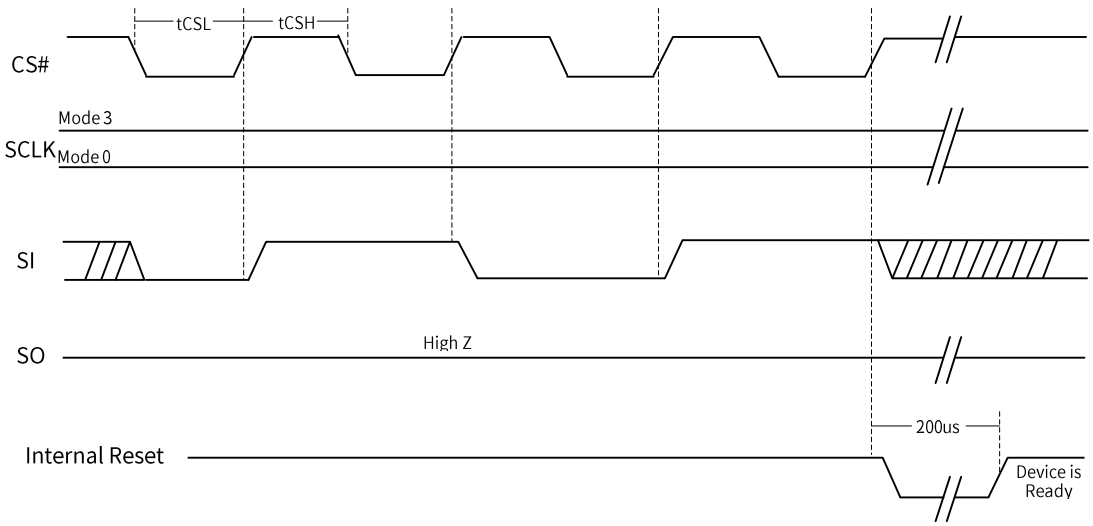

4. DATA PROTECTION

The device provides the following data protection methods:

- Write Enable (WREN) command: The WREN command sets the Write Enable Latch bit (WEL). The WEL bit will return to reset by the following situation:
  - Power-Up / Software Reset (66H+99H)
  - Write Disable (WRDI)
  - Write Status Register (WRSR)
  - Page Program (PP)
  - Sector Erase (SE) / Block Erase (BE) / Chip Erase (CE)
  - Erase Security Register / Program Security Register
- Software Protection Mode: The Block Protect (BP4, BP3, BP2, BP1, BP0) bits and CMP bit define the section of the memory array that can be read but cannot be changed.
- Hardware Protection Mode: WP# goes low to prevent writing status register.
- Deep Power-Down Mode: In Deep Power-Down Mode, all commands are ignored except the Release from Deep Power-Down Mode command (ABH) and software reset (66H+99H).

Table1.0 XT25Q128F-W Protected area size (CMP=0)

Status Register Content					Memory Content			
BP4	BP3	BP2	BP1	BP0	Blocks	Addresses	Density	Portion
X	X	0	0	0	NONE	NONE	NONE	NONE
0	0	0	0	1	252 to 255	FC0000H-FFFFFFH	256KB	Upper 1/64
0	0	0	1	0	248 to 255	F80000H-FFFFFFH	512KB	Upper 1/32
0	0	0	1	1	240 to 255	F00000H-FFFFFFH	1MB	Upper 1/16
0	0	1	0	0	224 to 255	E00000H-FFFFFFH	2MB	Upper 1/8
0	0	1	0	1	192 to 255	C00000H-FFFFFFH	4MB	Upper 1/4
0	0	1	1	0	128 to 255	800000H-FFFFFFH	8MB	Upper 1/2
0	1	0	0	1	0 to 3	000000H-03FFFFH	256KB	Lower 1/64
0	1	0	1	0	0 to 7	000000H-07FFFFH	512KB	Lower 1/32
0	1	0	1	1	0 to 15	000000H-0FFFFFH	1MB	Lower 1/16
0	1	1	0	0	0 to 31	000000H-1FFFFFH	2MB	Lower 1/8
0	1	1	0	1	0 to 63	000000H-3FFFFFH	4MB	Lower 1/4
0	1	1	1	0	0 to 127	000000H-7FFFFFH	8MB	Lower 1/2
X	X	1	1	1	0 to 255	000000H-FFFFFFH	16MB	ALL
1	0	0	0	1	255	FFF000H-FFFFFFH	4KB	Top Block
1	0	0	1	0	255	FFE000H-FFFFFFH	8KB	Top Block
1	0	0	1	1	255	FFC000H-FFFFFFH	16KB	Top Block
1	0	1	0	X	255	FF8000H-FFFFFFH	32KB	Top Block
1	0	1	1	0	255	FF8000H-FFFFFFH	32KB	Top Block
1	1	0	0	1	0	000000H-000FFFH	4KB	Bottom Block
1	1	0	1	0	0	000000H-001FFFH	8KB	Bottom Block
1	1	0	1	1	0	000000H-003FFFH	16KB	Bottom Block
1	1	1	0	X	0	000000H-007FFFH	32KB	Bottom Block
1	1	1	1	0	0	000000H-007FFFH	32KB	Bottom Block

Table1.1 XT25Q128F-W Protected area size (CMP=1)

Status Register Content					Memory Content			
BP4	BP3	BP2	BP1	BP0	Blocks	Addresses	Density	Portion
X	X	0	0	0	0 to 255	000000H-FFFFFFH	ALL	ALL
0	0	0	0	1	0 to 251	000000H-FBFFFFH	16128KB	Lower 63/64
0	0	0	1	0	0 to 247	000000H-F7FFFFH	15872KB	Lower 31/32
0	0	0	1	1	0 to 239	000000H-EFFFFFH	15MB	Lower 15/16
0	0	1	0	0	0 to 223	000000H-DFFFFFH	14MB	Lower 7/8
0	0	1	0	1	0 to 191	000000H-BFFFFFH	12MB	Lower 3/4
0	0	1	1	0	0 to 127	000000H-7FFFFFH	8MB	Lower 1/2
0	1	0	0	1	4 to 255	040000H-FFFFFFH	16128KB	Upper 63/64
0	1	0	1	0	8 to 255	080000H-FFFFFFH	15872KB	Upper 31/32
0	1	0	1	1	16 to 255	100000H-FFFFFFH	15MB	Upper 15/16
0	1	1	0	0	32 to 255	200000H-FFFFFFH	14MB	Upper 7/8
0	1	1	0	1	64 to 255	400000H-FFFFFFH	12MB	Upper 3/4
0	1	1	1	0	128 to 255	800000H-FFFFFFH	8MB	Upper 1/2
X	X	1	1	1	NONE	NONE	NONE	NONE
1	0	0	0	1	0 to 255	000000H-FFEFFFH	16380KB	L-4095/4096
1	0	0	1	0	0 to 255	000000H-FFDFFFH	16376KB	L-2047/2048
1	0	0	1	1	0 to 255	000000H-FFBFFFH	16368KB	L-1023/1024
1	0	1	0	X	0 to 255	000000H-FF7FFFH	16352KB	L-511/512
1	0	1	1	0	0 to 255	000000H-FF7FFFH	16352KB	L-511/512
1	1	0	0	1	0 to 255	001000H-FFFFFFH	16380KB	U-4095/4096
1	1	0	1	0	0 to 255	002000H-FFFFFFH	16376KB	U-2047/2048
1	1	0	1	1	0 to 255	004000H-FFFFFFH	16368KB	U-1023/1024
1	1	1	0	X	0 to 255	008000H-FFFFFFH	16352KB	U-511/512
1	1	1	1	0	0 to 255	008000H-FFFFFFH	16352KB	U-511/512

5. STATUS REGISTER

Status Register-1

S7	S6	S5	S4	S3	S2	S1	S0
SRP0	BP4	BP3	BP2	BP1	BP0	WEL	WIP
Status Register Protection Bit	Block Protect Bit	Block Protect Bit	Block Protect Bit	Block Protect Bit	Block Protect Bit	Write Enable Latch	Erase/Write In Progress
Non-volatile	Non-volatile	Non-volatile	Non-volatile	Non-volatile	Non-volatile	Volatile Read Only	Volatile Read Only

Status Register-2

S15	S14	S13	S12	S11	S10	S9	S8
SUS1	CMP	LB3	LB2	LB1	SUS2	QE	SRP1
Erase Suspend	Complement Protect Bit	Security Register Lock Bit	Security Register Lock Bit	Security Register Lock Bit	Program Suspend	Quad Enable	Status Register Protection Bit
Volatile Read Only	Non-volatile	Non-volatile (OTP)	Non-volatile (OTP)	Non-volatile (OTP)	Volatile Read Only	Non-volatile	Non-volatile

Status Register-3

S23	S22	S21	S20	S19	S18	S17	S16
Hold/RST	DRV1	DRV0	Reserved	Reserved	Reserved	DC1	DC0
HOLD or Reset Function	Output Driver Strength	Output Driver Strength	Reserved	Reserved	Reserved	Dummy Configuration Bit 1	Dummy Configuration Bit 0
Non-volatile	Non-volatile	Non-volatile	Reserved	Reserved	Reserved	Non-volatile	Non-volatile

HOLD/RST

The HOLD/RST bit is used to determine whether HOLD# or RESET# function should be implemented on the hardware pin for 8-pin packages. When HOLD/RST=0, the pin acts as HOLD#, When the HOLD/RST=1, the pin acts as RESET#. However, the HOLD# or RESET# function are only available when QE=0, If QE=1, The HOLD# and RESET# functions are disabled, the pin acts as dedicated data I/O pin.

DRV1, DRV0

The Output Driver Strength (DRV1 & DRV0) bits are used to determine the output driver strength for the Read operations.

DRV1	DRV0	Driver Strength
0	0	25% (Default)
0	1	50%
1	0	75%
1	1	100%

DC1, DC0

The Dummy Configuration Bits (DC1, DC0) select the mode and number of Dummy cycles between the end of address and the start of read data output for command EBH under SPI mode, EDH under SPI/QPI mode and 0DH, 0EH under QPI mode.

Dummy cycles provide additional latency that is needed to complete the initial read access of the flash array before data can be returned to the host system. Some read commands require additional latency cycles as the SCLK frequency is increased. The following dummy cycle tables provide different dummy cycle settings that are configured.

The Dummy Configuration Bits (DC1, DC0) Frequency Table

DC0	Quad I/O Fast Read EBH (SPI) Note 1
0 (default)	6 Dummy (104MHz)
1	10 Dummy (104MHz)

DC1	DTR Fast Read Quad I/O EDH (SPI, QPI)	DTR Fast Read 0DH (QPI)	DTR Read with Wrap 0EH (QPI)
0 (default)	8 Dummy (80MHz)	8 Dummy (80MHz)	8 Dummy (80MHz)
1	6 Dummy (66MHz)	6 Dummy (66MHz)	6 Dummy (66MHz)

NOTE:

1. The frequency instruction of Quad I/O EBH & Dual I/O BBH under Continuous Read Mode can be found in AC Characteristics lists. (fC3 & fC4)

SUS1, SUS2

The SUS1 and SUS2 bits are read only bits in the status register (S15 and S10) that are set to 1 after executing a Program/Erase Suspend (75H) command (The Erase Suspend will set the SUS1 to 1, and the Program Suspend will set the SUS2 to 1). The SUS1 and SUS2 bits are cleared to 0 by Program/Erase Resume (7AH) command, software reset (66H+99H) command as well as a power-down, power-up cycle.

CMP

The CMP bit is a non-volatile Read/Write bit in the Status Register (S14). It is used in conjunction the BP4-BP0 bits to provide more flexibility for the array protection. Please see the Status Register Memory Protection table for details. The default setting is CMP=0.

LB1, LB2, LB3

The LB1, LB2, LB3 bits are non-volatile One Time Program (OTP) bits in Status Register (S11-S13) that provide the write protect control and status to the Security Registers. The default state of LB1-LB3 are 0, the security registers are unlocked. The LB1-LB3 bits can be set to 1 individually using the Write Register instruction. The LB1-LB3 bits are One Time Programmable, once its set to 1, the Security Registers will become read-only permanently.

QE

The Quad Enable (QE) bit is a non-volatile Read/Write bit in the Status Register that allows Quad operation. When the QE bit is set to 0 (Default) the WP# pin and HOLD#/RESET# pin are enable. When the QE pin is set to 1, the Quad IO2 and IO3 pins are enabled.

SRP1, SRP0

The Status Register Protect (SRP1 and SRP0) bits are non-volatile Read/Write bits in the status register. The SRP bits control the type of write protection: software protection, hardware protection, power supply lock-down or one-time programmable protection.

SRP1	SRP0	WP#	Status Register	Description
0	0	X	Software Protected	The Status Register can be written to after a Write Enable command, WEL=1. (Default)
0	1	0	Hardware Protected	WP#=0, the Status Register locked and cannot be written to.
0	1	1	Hardware Unprotected	WP#=1, the Status Register is unlocked and can be written to after a Write Enable command, WEL=1.
1	0	X	Power Supply Lock-Down	Status Register is protected and cannot be written to again until the next Power-Down, Power-Up cycle. Note 1
1	1	X	One-Time Program Note 2	Status Register is protected and cannot be written to.

NOTE:

1. When SRP1, SRP0= (1, 0), a Power-Down, Power-Up cycle will change SRP1, SRP0 to (0, 0) state.
2. This feature is available on special order. Please contact XTX for details.
3. QE=1:

SRP1	SRP0	Status Register	Description
0	0	Software Unprotected	The Status Register can be written to after a Write Enable command, WEL=1. (Default)
0	1	Software Protected	The Status Register locked and cannot be written to.
1	0	Power Supply Lock-Down	Status Register is protected and cannot be written to again until the next Power-Down, Power-Up cycle. Note 1
1	1	One-Time Program Note 2	Status Register is protected and cannot be written to.

BP4, BP3, BP2, BP1, BP0

The Block Protect (BP4, BP3, BP2, BP1, BP0) bits are non-volatile. They define the size of the area to be software protected against Program and Erase commands. These bits are written with the Write Status Register (WRSR) command. When the Block Protect (BP4, BP3, BP2, BP1, BP0) bits are set to 1, the relevant memory area (as defined in Table 1.0 & 1.1) becomes protected against Page Program (PP), Sector Erase (SE) and Block Erase (BE) commands. The Block Protect (BP4, BP3, BP2, BP1, BP0) bits can be written provided that the Hardware Protected mode has not been set. The Chip Erase (CE) command is executed if the Block Protect (BP2, BP1, BP0) bits are 0 and CMP=0 or the Block Protect (BP2, BP1, BP0) bits are 1 and CMP=1.

WEL

The Write Enable Latch (WEL) bit indicates the status of the internal Write Enable Latch. When set to 1 the internal Write Enable Latch is set, when set to 0 the internal Write Enable Latch is reset and no Write Status Register, Program or Erase command is accepted.

WIP

The Write In Progress (WIP) bit indicates whether the memory is busy in program/erase/write status register progress. When WIP bit sets to 1, means the device is busy in program/erase/write status register progress, when WIP bit sets 0, means the device is not in program/erase/write status register progress.

6. COMMANDS DESCRIPTION

All commands, addresses and data are shifted in and out of the device, beginning with the most significant bit on the first rising edge of SCLK after CS# is driven low. Then, the one-byte command code must be shifted in to the device, most significant bit first on SI, each bit being latched on the rising edges of SCLK.

See Table 2, every command sequence starts with a one-byte command code. Depending on the command, this might be followed by address bytes, or by data bytes, or by both or none. CS# must be driven high after the last bit of the command sequence has been shifted in. For the command of Read, Fast Read, Read Status Register or Release from Deep Power-Down, and Read Device ID, the shifted-in command sequence is followed by a data-out sequence. CS# can be driven high after any bit of the data-out sequence is being shifted out.

For the command of Page Program, Sector Erase, Block Erase, Chip Erase, Write Status Register, Write Enable, Write Disable or Deep Power-Down command, CS# must be driven high exactly at a byte boundary, otherwise the command is rejected, and is not executed. That is CS# must be driven high when the number of clock pulses after CS# being driven low is an exact multiple of eight. For Page Program, if at any time the input byte is not a full byte, nothing will happen and WEL will not be reset.

Table2 Commands

Command Name	Command Code	SPI	QPI	Address Byte					Dummy Cycle	Data Byte
				Total ADD Byte	Byte1	Byte2	Byte3	Byte4		
Register Access										
Read Status Register_1	05H	√	√	0					0	1 to ∞
Read Status Register_2	35H	√	√	0					0	1 to ∞
Read Status Register_3	15H	√	√	0					0	1 to ∞
Write Status Register_1	01H	√	√	0					0	1 or 2
Write Status Register_2	31H	√	√	0					0	1
Write Status Register_3	11H	√	√	0					0	1
Read Manufacture/ Device ID	90H	√	√	3	00	00	00		0	1 to ∞
Read Serial Flash Discoverable Parameters	5AH	√	√	3	ADD1	ADD2	ADD3		8 Note1	1 to ∞
Read Unique ID	4BH	√	√	3	ADD1	ADD2	ADD3		8 Note1	1 to 128bit
Read Identification	9FH	√	√	0					0	1 to ∞
Array access										
Read Data	03H	√		3	ADD1	ADD2	ADD3		0	1 to ∞
Fast Read	0BH	√	√	3	ADD1	ADD2	ADD3		8 Note1	1 to ∞
Dual Output Fast Read	3BH	√		3	ADD1	ADD2	ADD3		8	1 to ∞
Dual I/O Fast Read	BBH	√		3	ADD1	ADD2	ADD3		4 Note2	1 to ∞
Quad Output Fast Read	6BH	√		3	ADD1	ADD2	ADD3		8	1 to ∞
Quad I/O Fast Read	EBH	√	√	3	ADD1	ADD2	ADD3		6 Note1 Note2 Note3	1 to ∞

Burst Read with Wrap	0CH		√	3	ADD1	ADD2	ADD3		2/4/6/8 Note1	1 to ∞
DTR Fast Read	0DH	√	√	3	ADD1	ADD2	ADD3		8/6 Note3	1 to ∞
DTR Fast Read Dual I/O	BDH	√		3	ADD1	ADD2	ADD3		6 Note2	1 to ∞
DTR Fast Read Quad I/O	EDH	√	√	3	ADD1	ADD2	ADD3		8/6 Note3	1 to ∞
DTR Read with Wrap	0EH		√	3	ADD1	ADD2	ADD3		8/6 Note3	1 to ∞
Page Program	02H	√	√	3	ADD1	ADD2	ADD3		0	1 to 256
Quad Page Program	32H	√		3	ADD1	ADD2	ADD3		0	1 to 256
4KB Sector Erase	20H	√	√	3	ADD1	ADD2	ADD3		0	0
32KB Block Erase	52H	√	√	3	ADD1	ADD2	ADD3		0	0
64KB Block Erase	D8H	√	√	3	ADD1	ADD2	ADD3		0	0
Chip Erase	C7/60H	√	√	0					0	0
Device Operations										
Enable Reset	66H	√	√	0					0	0
Reset	99H	√	√	0					0	0
Write Enable	06H	√	√	0					0	0
Write Enable for Volatile Status Register	50H	√	√	0					0	0
Write Disable	04H	√	√	0					0	0
Program Erase Suspend	75H	√	√	0					0	0
Program Erase Resume	7AH	√	√	0					0	0
Enable QPI	38H	√		0					0	0
Disable QPI	FFH		√	0					0	0
Set Burst with Wrap	77H	√		0	Dummy	Dummy	Dummy	W7-W0	0	0
Set Read Parameters	C0H		√	0	P7-P0				0	0
Deep Power-Down	B9H	√	√	0					0	0
Release From Deep Power-Down	ABH	√	√	0					0	0
Release From Deep Power-Down/Read Device ID	ABH	√	√	3	Dummy	Dummy	Dummy	ID7-ID0	0	1 to ∞
One-Time Programmable (OTP) Operations										

Erase Security Register	44H	√	√	3	ADD1	ADD2	ADD3		0	0
Program Security Register	42H	√	√	3	ADD1	ADD2	ADD3		0	1 to 256
Read Security Register	48H	√	√	3	ADD1	ADD2	ADD3		8 Note1	1 to ∞

Note:

1. In QPI mode, the number of dummy clocks is configured by the "Set Read Parameters (C0H)" command. Depending on the Read Parameter Bits P[5:4] setting, the number of dummy clocks can be configured as either 8/6/4/2.
2. M7-0 is counted for dummy clocks.
3. The number of dummy clocks for 0DH, EDH, 0EH is configured by DC1 bit in status register. The number of dummy clocks for EBH under SPI mode is configured by DC0 bit in status register.

Table of Device ID Definitions:

Operation Code	MID7-MID0	ID15-ID8	ID7-ID0
9FH	0B	60	18
90H	0B		17
ABH			17

6.1. Register Access

6.1.1. Read Status Register (05H or 35H or 15H)

The Read Status Register (RDSR) command is for reading the Status Register. The Status Register can be read at any time, even while a Program, Erase or Write Status Register cycle is in progress. When one of these cycles is in progress, it is recommended to check the Write In Progress (WIP) bit before sending a new command to the device. It is also possible to read the Status Register continuously. For command code "05H", the SO will output Status Register bits S7~S0. For the command code "35H", the SO will output Status Register bits S15~S8. For the command code "15H", the SO will output Status Register bits S23~S16.

Figure 1. Read Status Register Sequence Diagram

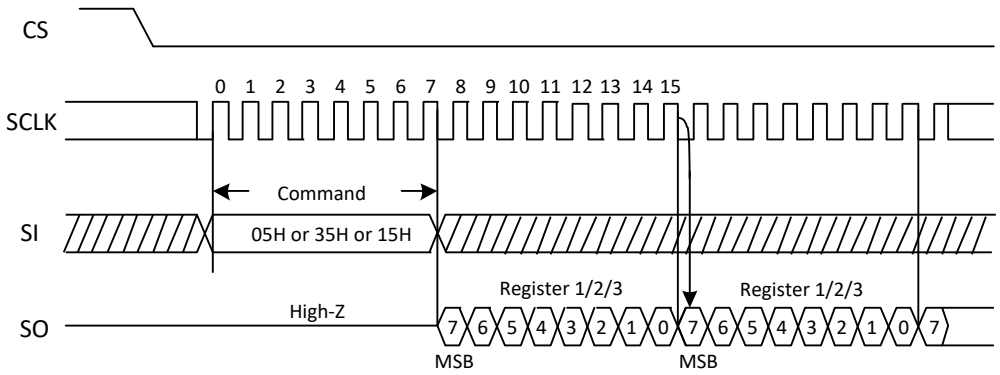

Figure 1a. Read Status Register Sequence Diagram (QPI)

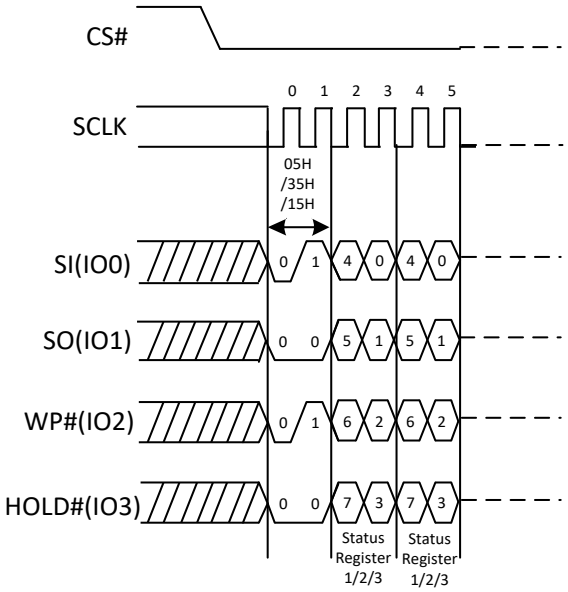

6.1.2. Write Status Register (01H or 31H or 11H)

The Write Status Register (WRSR) command allows new values to be written to the Status Register. Before it can be accepted, a Write Enable (WREN) command must previously have been executed. After the Write Enable (WREN) command has been decoded and executed, the device sets the Write Enable Latch (WEL).

The Write Status Register (WRSR) command has no effect on the volatile bits of the Status Register. CS# must be driven high after the eighth or sixteenth bit of the data byte has been latched in. If not, the Write Status Register (WRSR) command is not executed. As soon as CS# is driven high, the self-timed Write Status Register cycle (whose duration is tW) is initiated. While the Write Status Register cycle is in progress, the Status Register may still be read to check the value of the Write In Progress (WIP) bit. The Write In Progress (WIP) bit is 1 during the self-timed Write Status Register cycle, and is 0 when it is completed. When the cycle is completed, the Write Enable Latch (WEL) is reset.

The Write Status Register (WRSR) command allows the user to change the values of the Block Protect (BP4, BP3, BP2, BP1, BP0) bits, to define the size of the area that is to be treated as read-only, as defined in Table 1.0 & 1.1. The Write Status Register (WRSR) command also allows the user to set or reset the Status Register Protect (SRP) bit in accordance with the Write Protect (WP#) signal. The Status Register Protect (SRP) bit and Write Protect (WP#) signal allow the device to be put in the Hardware Protected Mode. The Write Status Register (WRSR) command is not executed once the Hardware Protected Mode is entered. For command code “01H”, the SI will input Status Register bits S7~S0, S15~S8. For the command code “31H”, the SI will input Status Register bits S15~S8. For the command code “11H”, the SI will input Status Register bits S23~S16.

Figure 2. Write Status Register Sequence Diagram

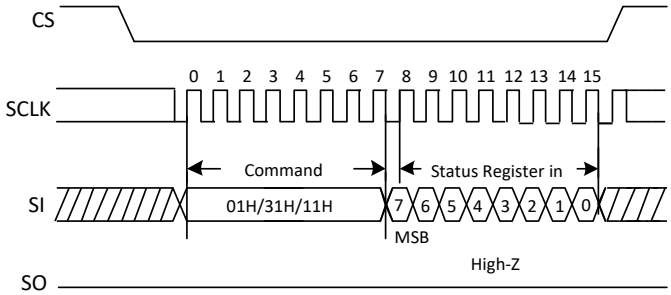

Figure 2a. Write Status Register Sequence Diagram (QPI)

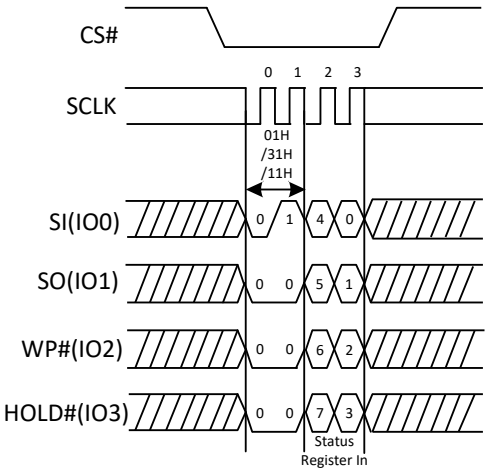

6.1.3. Read Manufacture ID/ Device ID (90H)

The command is initiated by driving the CS# pin low and shifting the command code "90H" followed by a 24-bit address (A23-A0) of 000000H. After which, the Manufacturer ID and the Device ID are shifted out on the falling edge of SCLK with most significant bit (MSB) first is shown in Figure 3. If the 24-bit address is initially set to 000001H, the Device ID will be read first.

Figure 3. Read Manufacture ID/ Device ID Sequence Diagram

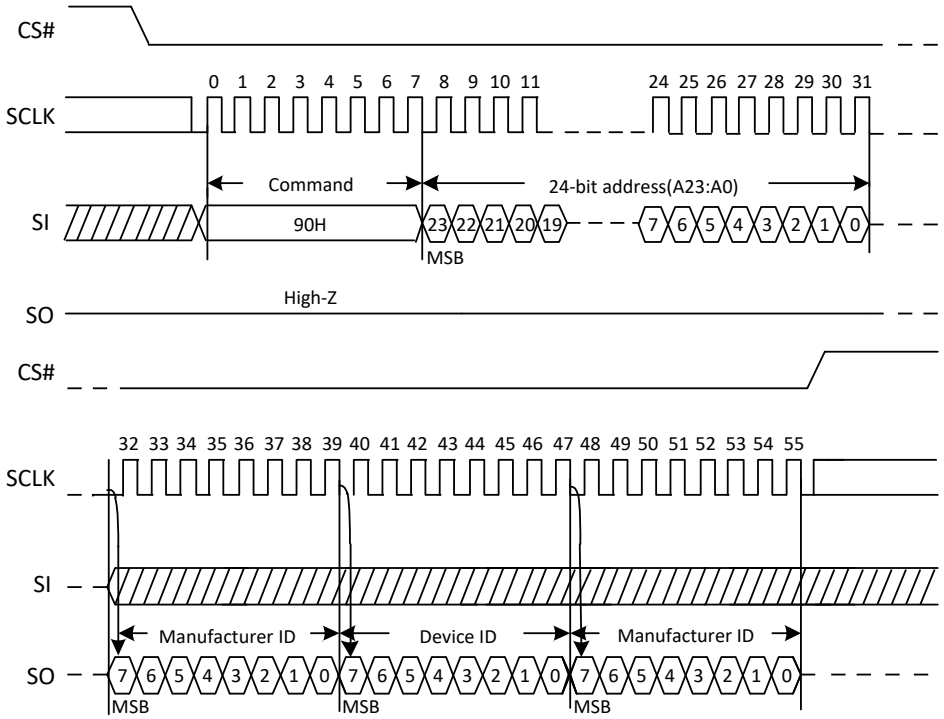

Figure 3a. Read Manufacture ID/ Device ID Sequence Diagram (QPI)

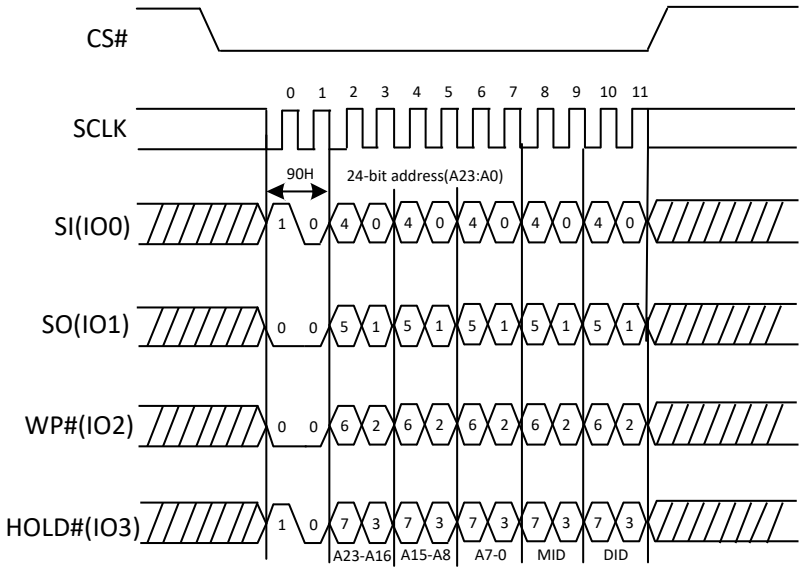

6.1.4. Read SFDP (5AH)

The Serial Flash Discoverable Parameter (SFDP) standard provides a consistent method of describing the functional and feature capabilities of serial flash devices in a standard set of internal parameter tables. These parameter tables can be interrogated by host system software to enable adjustments needed to accommodate divergent features from multiple vendors. The concept is similar to the one found in the Introduction of JEDEC Standard, JESD68 on CFI. SFDP is a standard of JEDEC Standard No.216.

Note: For SFDP Table, please contact XTX.

Figure 4. Read Serial Flash Discoverable Parameter command Sequence Diagram

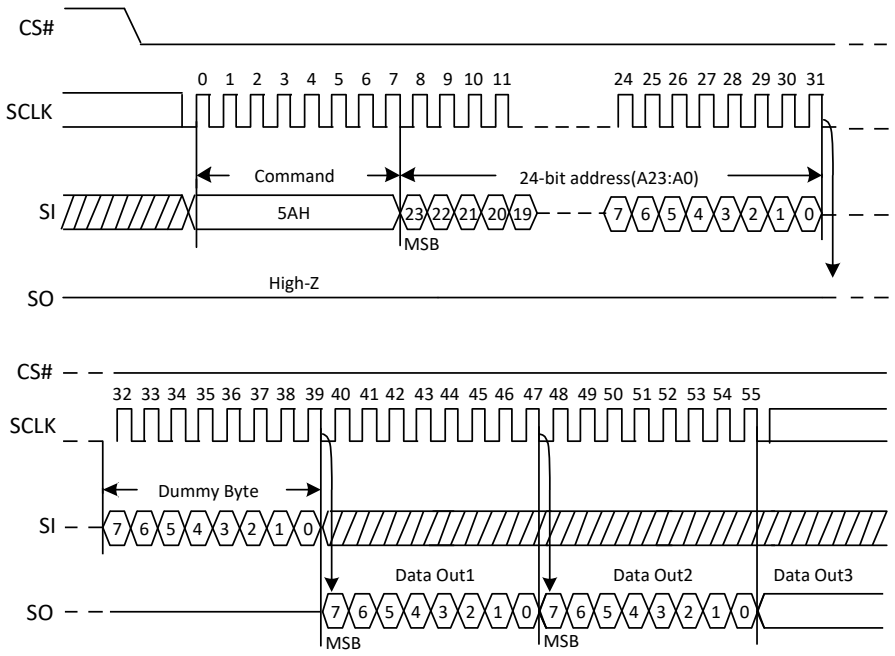

Note: A23-A8 = 0, A7-A0 is the starting byte address for 256-byte SFDP Register.

Read Serial Flash Discoverable Parameter (5AH) in QPI mode

The Read Serial Flash Discoverable Parameter command is also supported in QPI mode. See the following figure. In QPI mode, the number of dummy clocks is configured by the "Set Read Parameters (C0H)" command to accommodate a wide range application with different needs for either maximum Fast Read frequency or minimum data access latency. Depending on the Read Parameter Bits P[5:4] setting, the number of dummy clocks can be configured as either 8/6/4/2.

Figure 4a. Read Serial Flash Discoverable Parameter command Sequence Diagram (QPI)

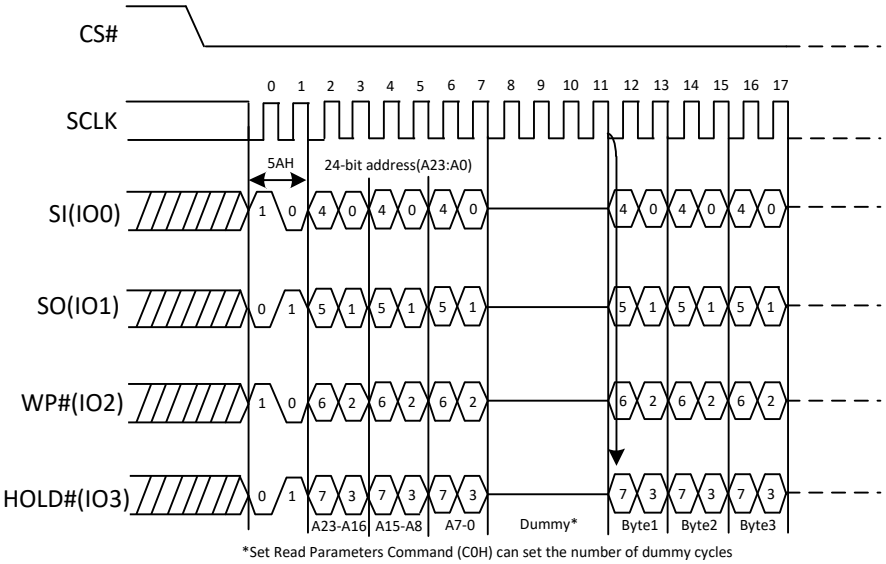

6.1.5. Read Unique ID (4BH)

The Read Unique ID command accesses a factory-set read-only 128bit number that is unique to each device. The Unique ID can be used in conjunction with user software methods to help prevent copying or cloning of a system.

The Read Unique ID command sequence: CS# goes low → Sending Read Unique ID command c Sending 24-bit address (A23:A0) (Don't care) + 1 dummy Byte → 128bit Unique ID Out → CS# goes high.

The command sequence is shown below.

Figure 5. Read Unique ID (RUID) Sequence (Command 4BH)

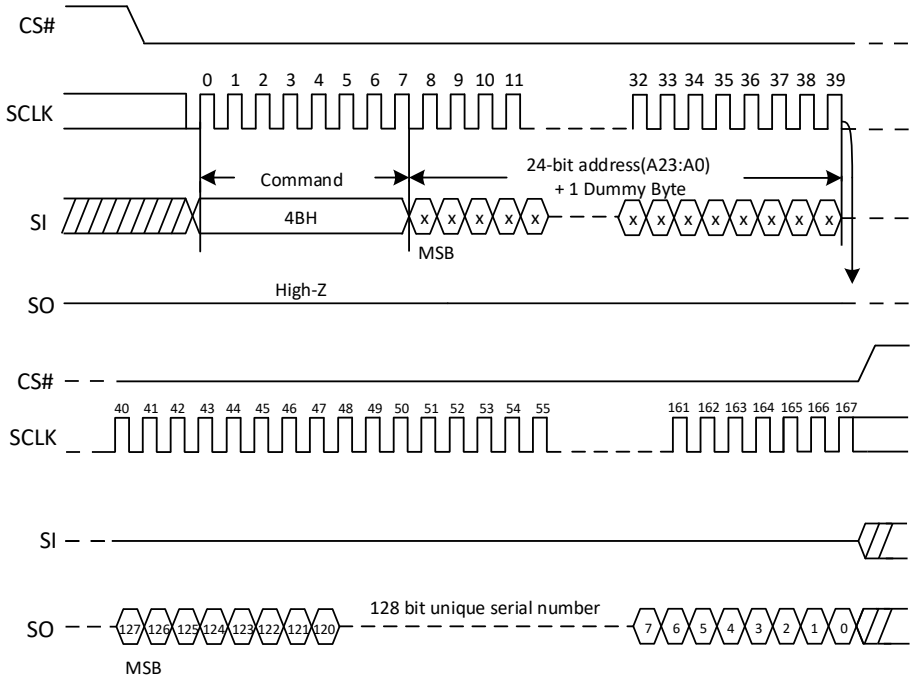

Read Unique ID (4BH) in QPI mode

The Read Unique ID command is also supported in QPI mode. See the figure below, In QPI mode, the number of dummy clocks is configured by the "Set Read Parameters (C0H)" command to accommodate a wide range application with different needs for either maximum Fast Read frequency or minimum data access latency. Depending on the Read Parameter Bits P[5:4] setting, the number of dummy clocks can be configured as either 8/6/4/2.

Figure 5a. Read Unique ID (RUID) Sequence (Command 4BH) (QPI)

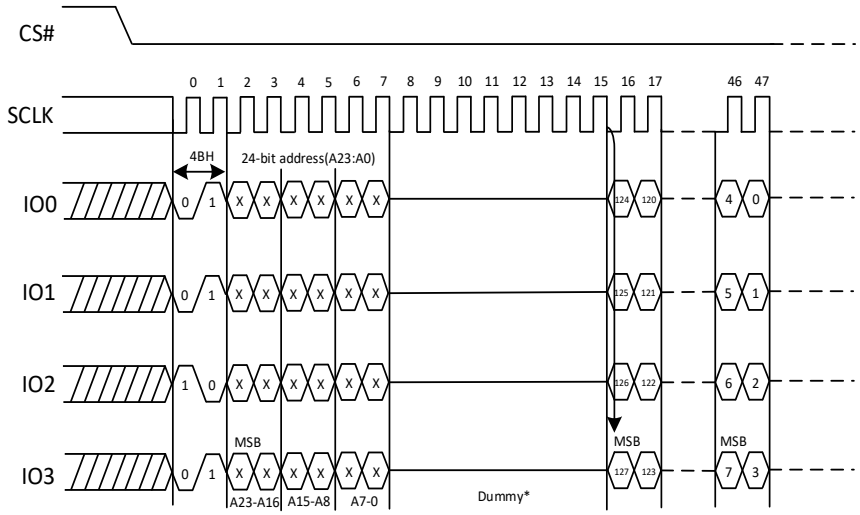

*Set Read Parameters Command (C0H) can set the number of dummy cycles

6.1.6. Read Identification (9FH)

The Read Identification (RDID) command allows the 8-bit manufacturer identification to be read, followed by two bytes of device identification. The device identification indicates the memory type in the first byte, and the memory capacity of the device in the second byte. Any Read Identification (RDID) command while an Erase or Program cycle is in progress will not be decoded, and has no effect on the cycle that is in progress. The Read Identification (RDID) command should not be issued while the device is in Deep Power-Down Mode.

The device is first selected by driving CS# to low. Then, the 8-bit command code for the command is shifted in. This is followed by the 24-bit manufacture identification and device identification, stored in the memory, being shifted out on Serial Data Output, each bit being shifted out during the falling edge of Serial Clock. The command sequence is shown in Figure 6. The Read Identification (RDID) command is terminated by driving CS# to high at any time during data output. When CS# is driven high, the device is put in the Standby Mode. Once in the Standby Mode, the device waits to be selected, so that it can receive, decode and execute commands.

Figure 6. Read Identification ID Sequence Diagram

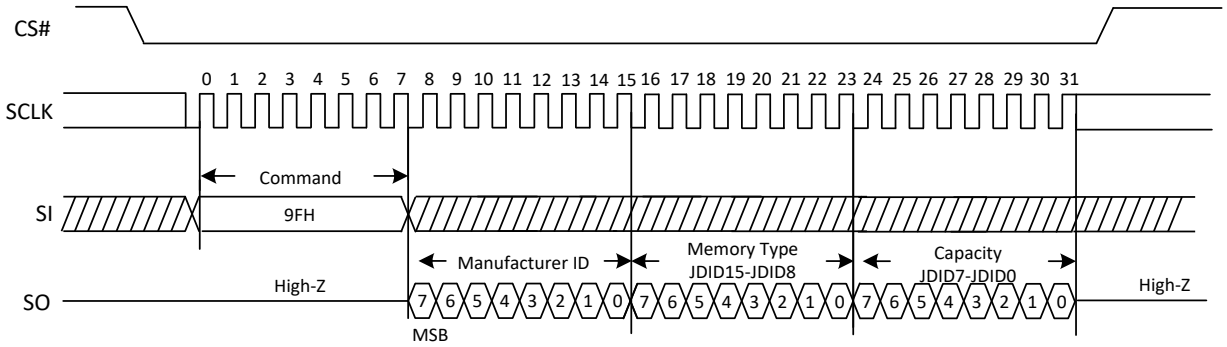

Figure 6a. Read Identification ID Sequence Diagram (QPI)

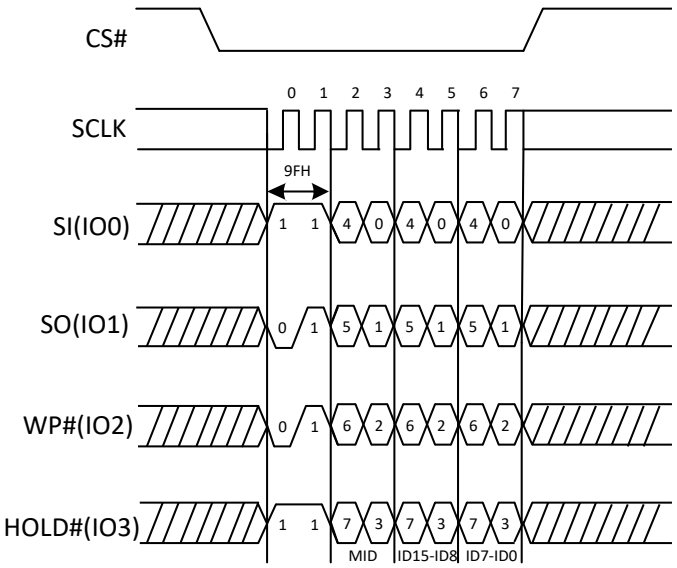

6.2. Array access

6.2.1. Normal Read (03H)

The Read Data Bytes (READ) command is followed by a 3-byte address (A23-A0), each bit being latched-in during the rising edge of SCLK. Then the memory content, at that address, is shifted out on SO, each bit being shifted out, at a Max frequency fR, during the falling edge of SCLK. The first byte addressed can be at any location. The address is automatically incremented to the next address after each byte of data is shifted out. The whole memory can, therefore, be read with a single Read Data Bytes (READ) command. Any Read Data Bytes (READ) command, while an Erase, Program or Write cycle is in progress, is rejected without having any effects on the cycle that is in progress.

Figure 7.Read Data Bytes Sequence Diagram

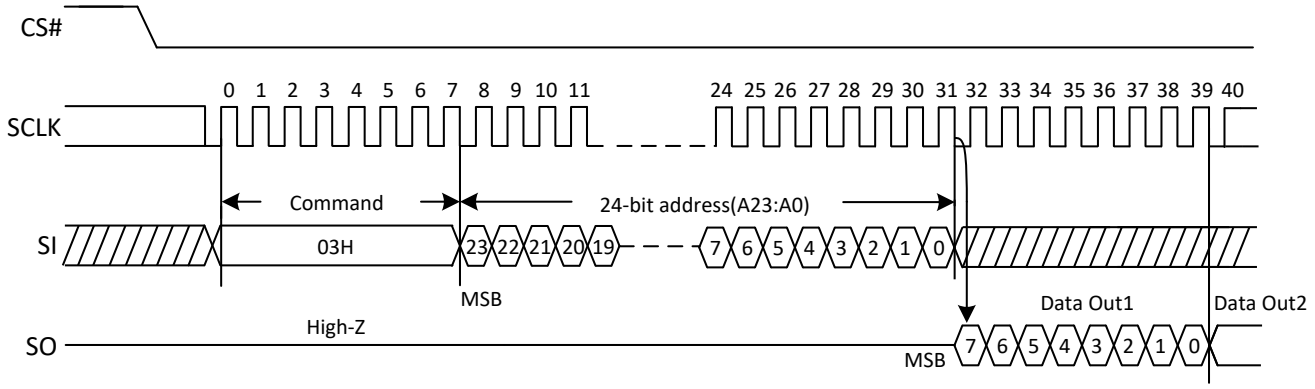

6.2.2. Fast Read (0BH)

The Read Data Bytes at Higher Speed (Fast Read) command is for quickly reading data out. It is followed by a 3-byte address (A23-A0) and a dummy byte, each bit being latched-in during the rising edge of SCLK. Then the memory content, at that address, is shifted out on SO, each bit being shifted out, at a Max frequency fC, during the falling edge of SCLK. The first byte addressed can be at any location. The address is automatically incremented to the next address after each byte of data is shifted out.

Figure 8. Read Data By test Higher Speed Sequence Diagram

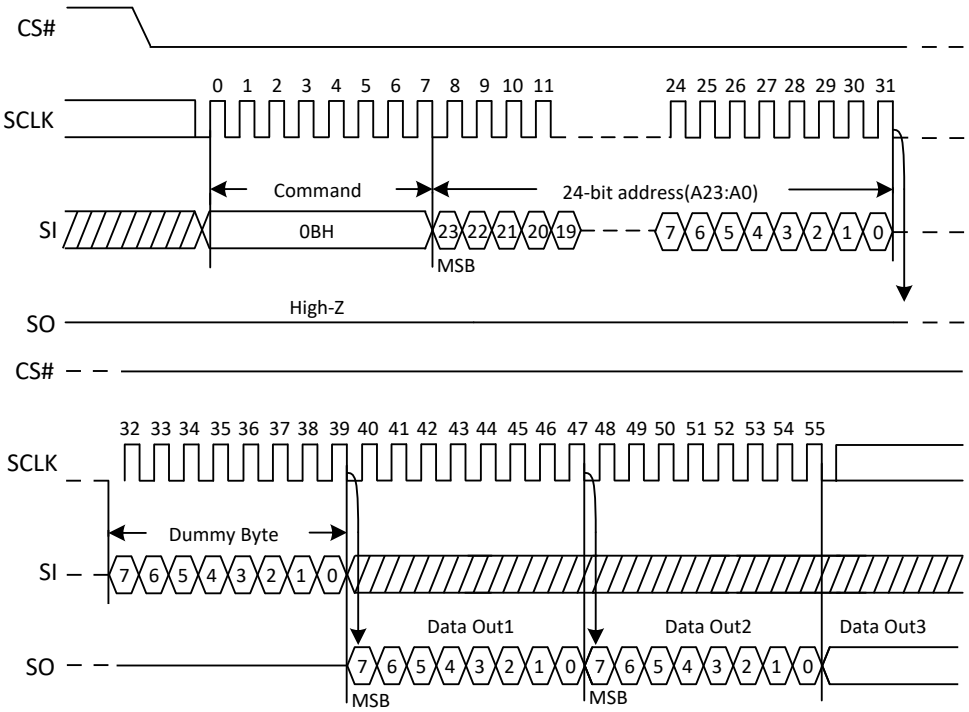

Fast Read (0BH) in QPI mode

The Fast Read command is also supported in QPI mode. In QPI mode, the number of dummy clocks is configured by the "Set Read Parameters (C0H)" command to accommodate a wide range application with different needs for either maximum Fast Read frequency or minimum data access latency. Depending on the Read Parameter Bits P5-P4 setting, the number of dummy clocks can be configured as either 8/6/4/2.

The "Wrap Around" feature is not available in QPI mode for Fast Read instruction.

Figure 8a. Read Data Bytes at Higher Speed Sequence Diagram (QPI)

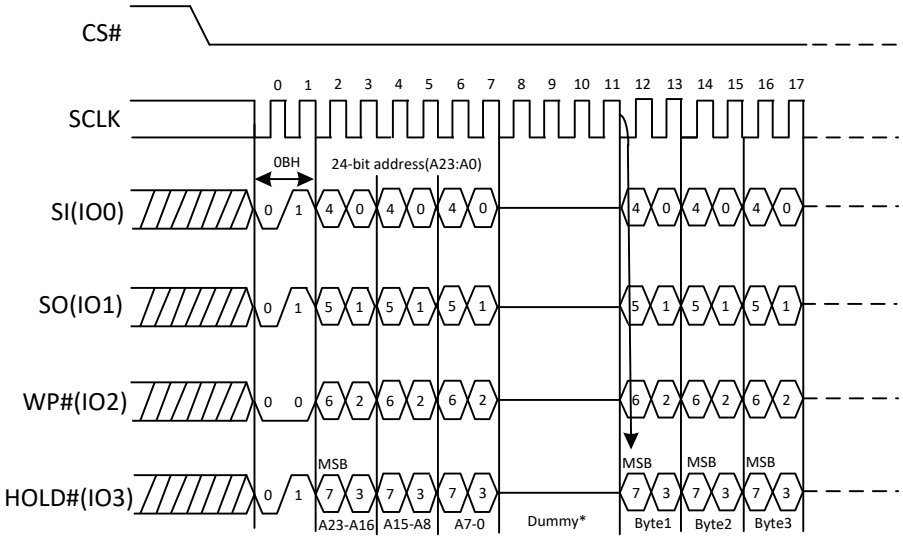

*Set Read Parameters Command (C0H) can set the number of dummy clocks

6.2.3. Dual Output Fast Read (3BH)

The Dual Output Fast Read command is followed by 3-byte address (A23-A0) and a dummy byte, each bit being latched in during the rising edge of SCLK, then the memory contents are shifted out 2-bit per clock cycle from SI and SO. The command sequence is shown in the following figure. The first byte addressed can be at any location. The address is automatically incremented to the next address after each byte of data is shifted out.

Figure 9. Dual Output Fast Read Sequence Diagram

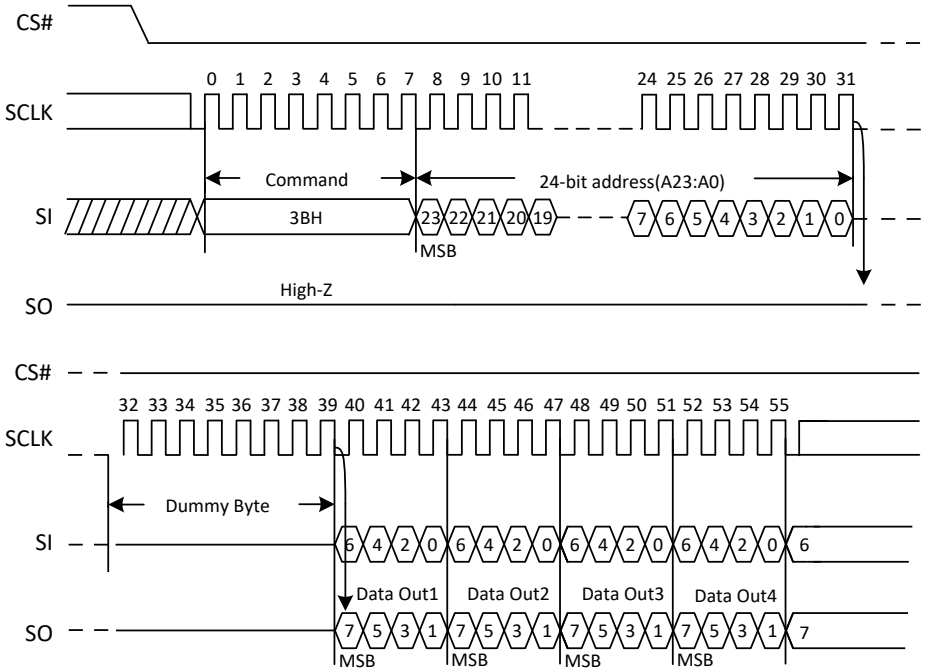

6.2.4. Dual I/O Fast Read (BBH)

The Dual I/O Fast Read command is similar to the Dual Output Fast Read command but with the capability to input the 3-byte address (A23-0) and a “Continuous Read Mode” byte 2-bit per clock by SI and SO, each bit being latched in during the rising edge of SCLK, then the memory contents are shifted out 2-bit per clock cycle from SI and SO. The command sequence is shown in the following figure. The first byte addressed can be at any location. The address is automatically incremented to the next address after each byte of data is shifted out.

Figure 10. Dual I/O Fast Read Sequence Diagram (M5-4≠(1,0))

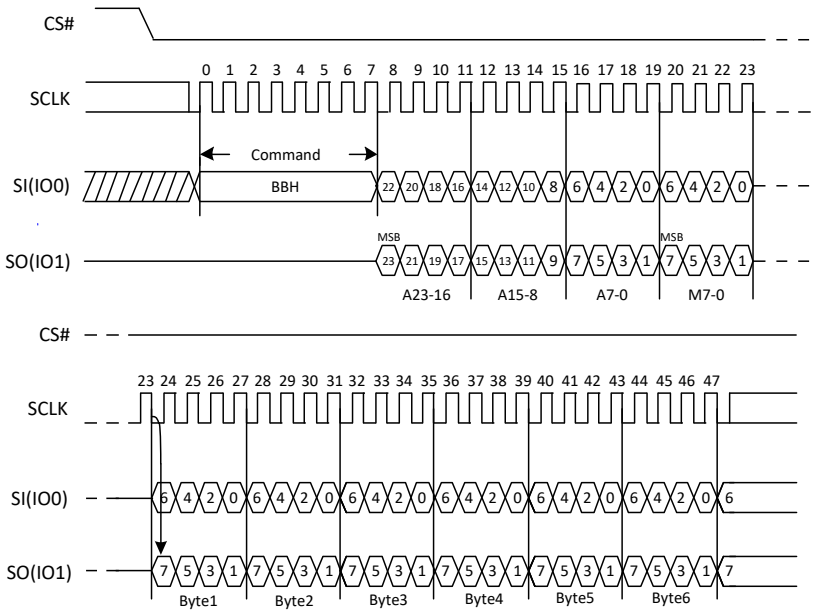

Dual I/O Fast Read with "Continuous Read Mode"

The Dual I/O Fast Read command can further reduce command overhead through setting the "Continuous Read Mode" bits (M7-0) after the input 3-byte address (A23-A0). If the "Continuous Read Mode" bits (M5- 4) =(1, 0), then the next Dual I/O Fast Read command (after CS# is raised and then lowered) does not require the BBH command code. The command sequence is shown in figure below. If the "Continuous Read Mode" bits (M5- 4) do not equal (1, 0), the next command requires the first BBH command code, thus returning to normal operation. A "Continuous Read Mode" Reset command can be used to reset (M5- 4) before issuing normal command.

Figure 10a. Dual I/O Fast Read Sequence Diagram (M5-4=(1,0))

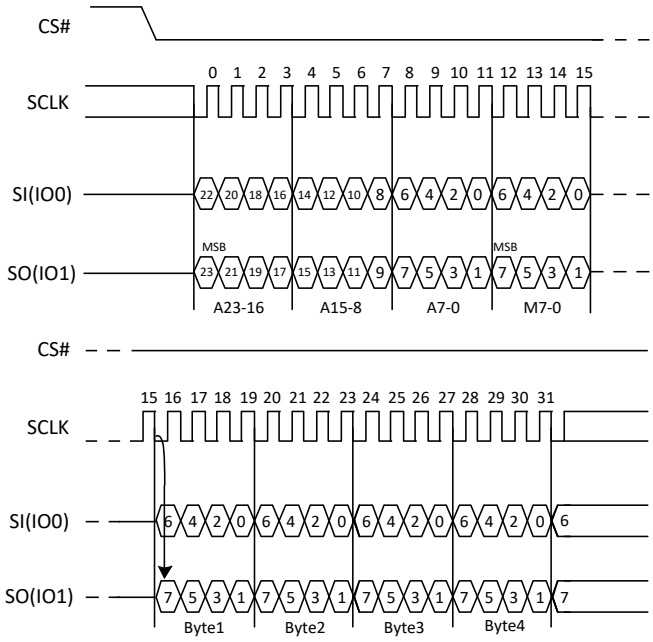

6.2.5. Quad Output Fast Read (6BH)

The Quad Output Fast Read command is followed by 3-byte address (A23-A0) and a dummy byte, each bit being latched in during the rising edge of SCLK, then the memory contents are shifted out 4-bit per clock cycle from IO3, IO2, IO1 and IO0. The command sequence is shown in the figure below. The first byte addressed can be at any location. The address is automatically incremented to the next address after each byte of data is shifted out.

Figure 11. Quad Output Fast Read Sequence Diagram

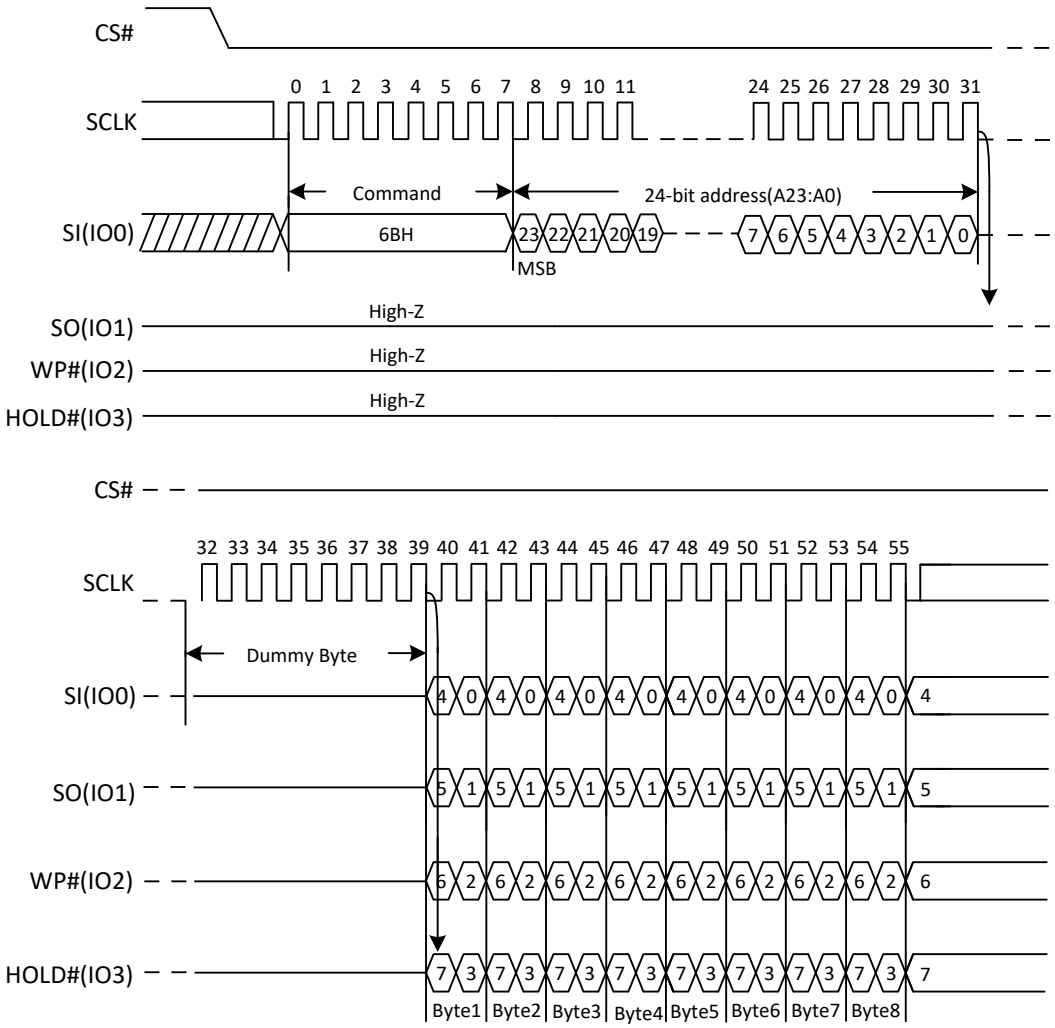

6.2.6. Quad I/O Fast Read (EBH)

The Quad I/O Fast Read command is similar to the Dual I/O Fast Read command but with the capability to input the 3-byte address (A23-0) and a “Continuous Read Mode” byte and 4 dummy clock 4-bit per clock by IO0, IO1, IO3, IO4, each bit being latched in during the rising edge of SCLK, then the memory contents are shifted out 4-bit per clock cycle from IO0, IO1, IO2, IO3. The command sequence is shown in the figure below. The first byte addressed can be at any location. The address is automatically incremented to the next address after each byte of data is shifted out. The Quad Enable bit (QE) of Status Register (S9) must be set to 1 to enable for the Quad I/O Fast read command.

The number of Dummy clocks for “Quad I/O Fast Read” (EBH) can be set by the Dummy Configuration Bit 0 (DC0) in status register. When the DC0 bit is set to 0, which is default, the number of Dummy clock cycles is 6. When the DC0 bit is set to 1, the Dummy clock cycles is 10.

Figure 12. Quad I/O Fast Read Sequence Diagram (M5-4≠(1,0))

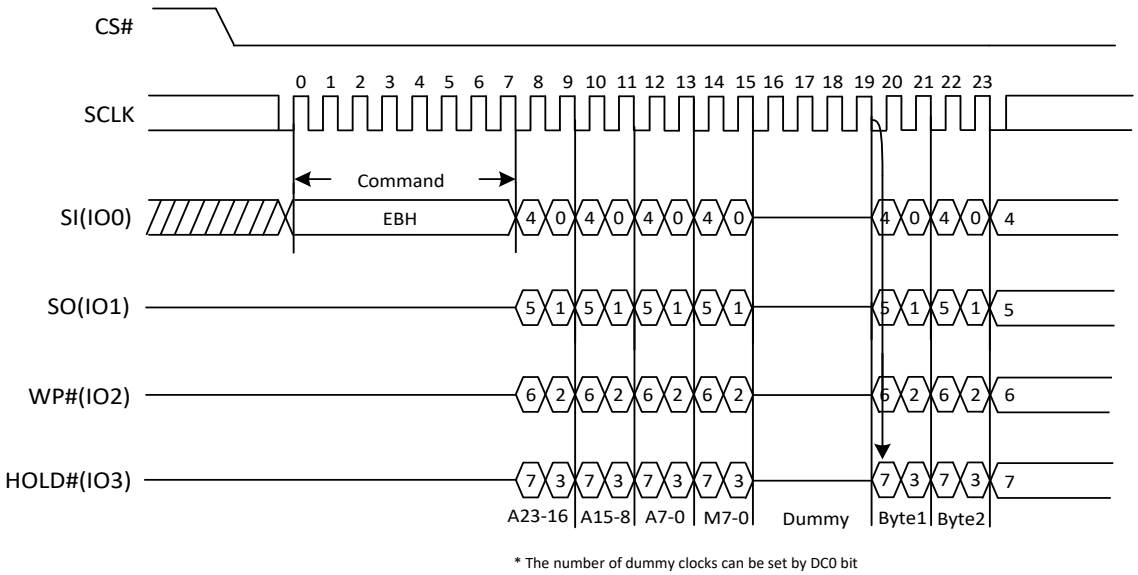

Quad I/O Fast Read with "Continuous Read Mode"

The Quad I/O Fast Read command can further reduce command overhead through setting the "Continuous Read Mode" bits (M7-0) after the input 3-byte address (A23-A0). If the "Continuous Read Mode" bits (M5-4) =(1, 0), then the next Quad I/O Fast Read command (after CS# is raised and then lowered) does not require the EBH command code. The command sequence is shown in Figure 12a. If the "Continuous Read Mode" (M5- 4) do not equal (1, 0), the next command requires the first EBH command code, thus returning to normal operation. A "Continuous Read Mode" Reset command can be used to reset (M5- 4) before issuing normal command.

Figure 12a. Quad I/O Fast Read Sequence Diagram (M5-4=(1,0))

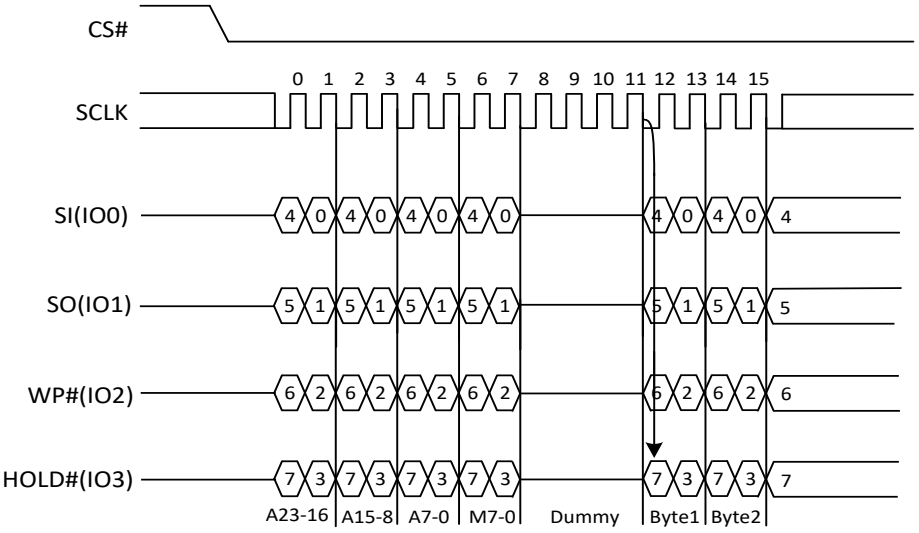

* The number of dummy clocks can be set by DC0 bit

Quad I/O Fast Read with "8/16/32/64-Byte Wrap Around" in Standard SPI mode

The Quad I/O Fast Read command can be used to access a specific portion within a page by issuing "Set Burst with Wrap" (77H) commands prior to EBH. The "Set Burst with Wrap" (77H) command can either enable or disable the "Wrap Around" feature for the following EBH commands. When "Wrap Around" is enabled, the data being accessed can be limited to either an 8/16/32/64-byte section of a 256-byte page. The output data starts at the initial address specified in the command, once it reaches the ending boundary of the 8/16/32/64-byte section, the output will wrap around the beginning boundary automatically until CS# is pulled high to terminate the command.

The Burst with Wrap feature allows applications that use cache to quickly fetch a critical address and then fill the cache afterwards within a fixed length (8/16/32/64-byte) of data without issuing multiple read commands.

Quad I/O Fast Read (EBH) in QPI mode

The Quad I/O Fast Read command is also supported in QPI mode. See the figure below. In QPI mode, the number of dummy clocks is configured by the "Set Read Parameters (C0H)" command to accommodate a wide range application with different needs for either maximum Fast Read frequency or minimum data access latency. Depending on the Read Parameter Bits P[5:4] setting, the number of dummy clocks can be configured as either 8/6/4/2.

In QPI mode, the "Continuous Read Mode" bits M7-M0 are also considered as dummy clocks. "Continuous Read Mode" feature is also available in QPI mode for Quad I/O Fast Read command.

The "Wrap Around" feature is not available in QPI mode for Quad I/O Fast Read instruction.

Figure 12b. Quad I/O Fast Read Sequence Diagram (M5-4= (1, 0) QPI)

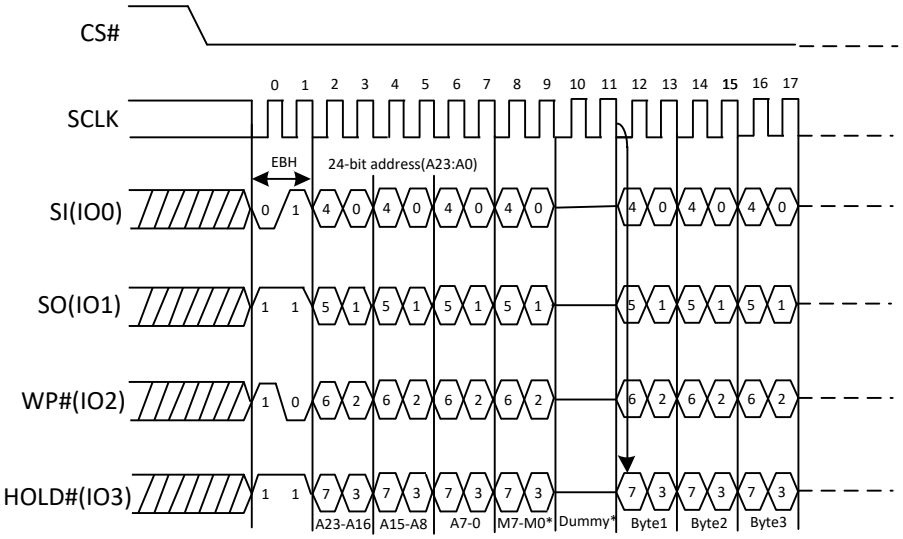

*Set Read Parameters Command (C0H) can set the number of Dummy clocks

6.2.7. Burst Read With Wrap (0CH)

The “Burst Read with Wrap (0CH)” command provides an alternative way to perform the read operation with “Wrap Around” in QPI mode. This command is similar to the “Fast Read (0BH)” command in QPI mode, except the addressing of the read operation will “Wrap Around” to the beginning boundary of the “Wrap Around” once the ending boundary is reached. The “Wrap Length” and the number of dummy clocks can be configured by the “Set Read Parameters (C0H)” command.

Depending on the Read Parameter Bits P[5:4] setting of the “Set Read Parameters (C0H)” command, the number of dummy clocks can be configured as either 8/6/4/2.

Figure 13. Burst Read with Wrap command Sequence Diagram

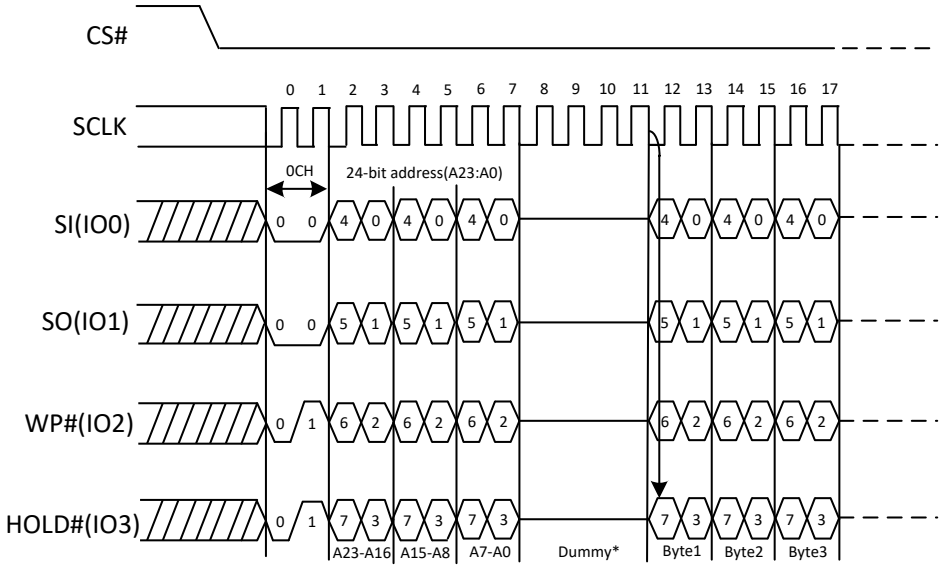

*Set Read Parameters Command (C0H) can set the number of Dummy clocks

6.2.8. DTR Fast Read (0DH)

The DTR Fast Read instruction is similar to the Fast Read instruction except that the 24-bit address input and the data output require DTR (Double Transfer Rate) operation. This is accomplished by adding six dummy clocks after a 3-byte address (A23-A0) or a 4-byte address (A31-A0) as shown in the figure below. The dummy clocks allow the devices internal circuits additional time for setting up the initial address. During the dummy clocks the data value on the IO pin is a “don’t care”.

Figure 14. DTR Fast Read Instruction(SPI Mode)

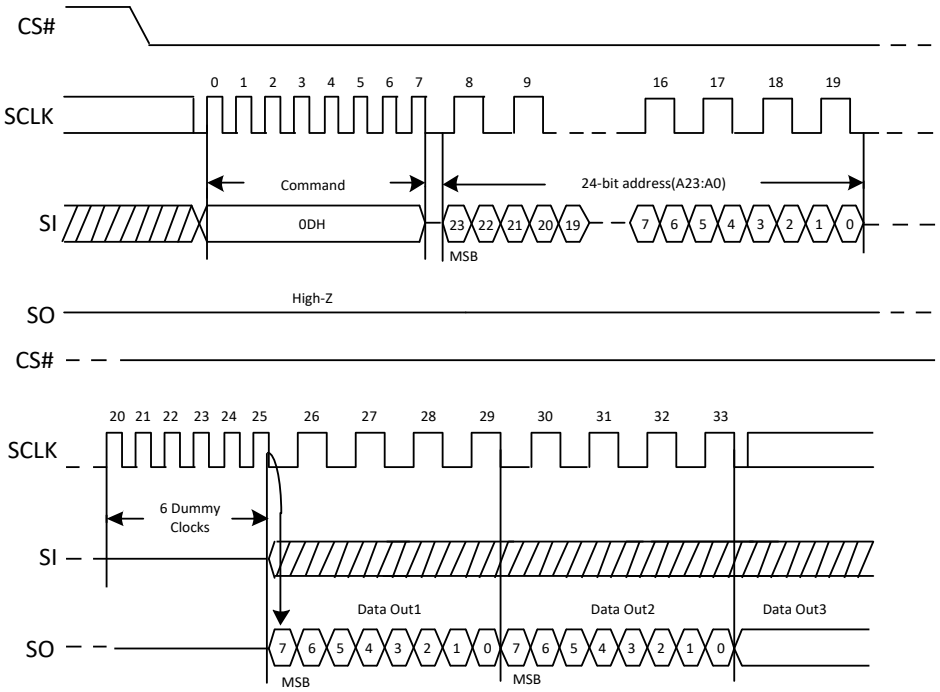

DTR Fast Read (0DH) in QPI Mode

The DTR Fast Read instruction is also supported in QPI mode. The number of dummy clocks for “DTR Fast Read” (0DH) and “DTR Burst Read With Wrap”(0EH) under QPI mode and “DTR Fast Read Quad IO” (EDH) can be set by the Dummy Configuration Bit1 (DC1) in status register. When the DC1 bit is set to 0, which is default, the number of dummy clock cycles is 8. When the DC1 bit is set to 1, the dummy clock cycles is 6.

Figure 14a. DTR Fast Read Instruction(QPI Mode)

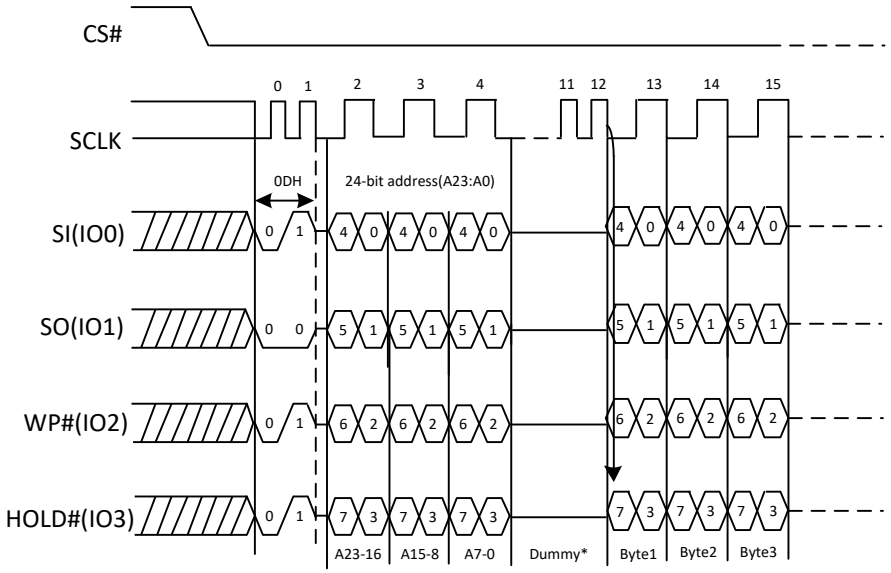

* The number of dummy clocks can be set by DC1 bit

6.2.9. DTR Fast Read Dual I/O(BDH)

The DTR Fast Read Dual I/O (BDH) instruction allows for improved random access while maintaining two IO pins, IO0 and IO1. It is similar to the Fast Read Dual Output (3BH) instruction but with the capability to input a 3-byte address (A23-A0) or a 4-byte address (A31-A0) two bits per clock. This reduced instruction overhead may allow for code execution (XIP) directly from the Dual SPI in some applications.

DTR Fast Read Dual I/O with "Continuous Read Mode"

The DTR Fast Read Dual I/O instruction can further reduce instruction overhead through setting the "Continuous Read Mode" bits (M7-0) after a 3-byte address (A23-A0) or a 4-byte address (A31-A0), as shown in "3BH" command description. The upper nibble of the (M7-4) controls the length of the next DTR Fast Read Dual I/O instruction through the inclusion or exclusion of the first byte instruction code. The lower nibble bits of the (M3-0) are don't care ("x"). However, the IO pins should be high-impedance for 4 dummy clocks prior to the falling edge of the first data out clock.

If the "Continuous Read Mode" bits M5-4 = (1, 0), then the next DTR Fast Read Dual I/O instruction (after CS# is raised and then lowered) does not require the BDH instruction code, as shown in the figure below. This reduces the instruction sequence by eight clocks and allows the Read address to be immediately entered after CS# is asserted low. If the "Continuous Read Mode" bits M5-4 do not equal to (1,0), the next instruction (after CS# is raised and then lowered) requires the first byte instruction code, thus returning to normal operation. It is recommended to input FFFFh/FFFFFh on IO0 for the next instruction (16/20 clocks), to ensure M4 = 1 and return the device to normal operation.

Figure 15. DTR Fast Read Dual I/O(Initial instruction or previous M5-4≠10，SPI Mode only)

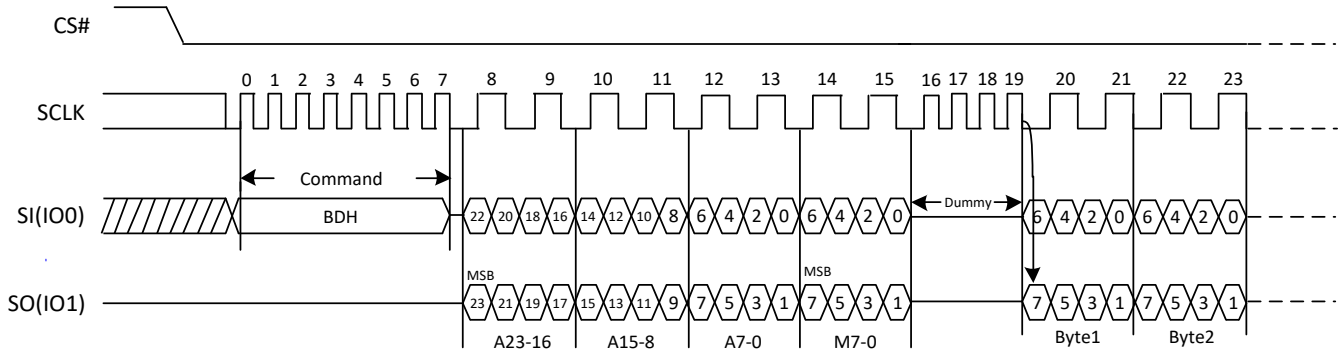

Figure 15a. DTR Fast Read Dual I/O (Previous instruction set M5-4=10, SPI Mode only)

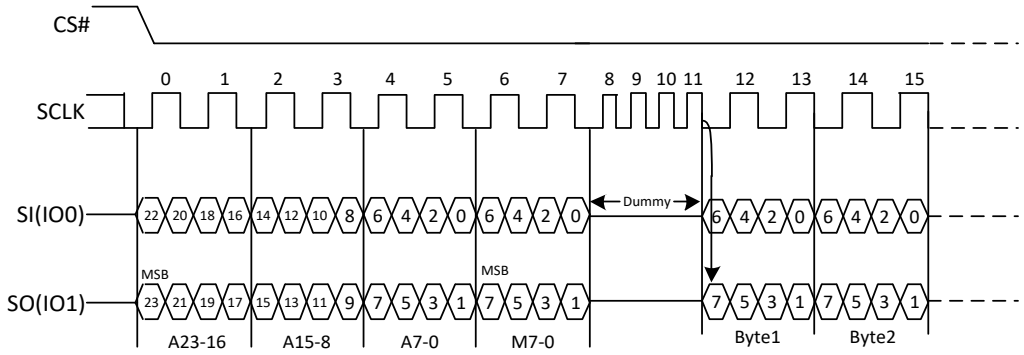

6.2.10. DTR Fast Read Quad I/O (EDH)

The DTR Fast Read Quad I/O (EDH) instruction is similar to the Fast Read Quad I/O (EBH) instruction except that address and data bits are input and output twice for each clock through four pins IO0, IO1, IO2 and IO3 and several Dummy clocks(including M7-M0) are required in SPI mode prior to the data output. The Quad I/O dramatically reduces instruction overhead allowing faster random access for code execution (XIP) directly from the Quad SPI. The Quad Enable bit (QE) of Status Register must be set to enable the DTR Fast Read Quad I/O Instruction.

The number of dummy clocks for "DTR Fast Read Quad I/O" (EDH) can be set by the Dummy Configuration Bit 1 (DC1) in status register. When the DC1 bit is set to 0, which is default, the number of dummy clock cycles is 8. When the DC1 bit is set to 1, the number of dummy clock cycles is 6.

DTR Fast Read Quad I/O with "Continuous Read Mode"

The DTR Fast Read Quad I/O instruction can further reduce instruction overhead through setting the "Continuous Read Mode" bits (M7-0) after the input Address bits (A23-0), as shown in "6BH" command description. The upper nibble of the (M7-4) controls the length of the next DTR Fast Read Quad I/O instruction through the inclusion or exclusion of the first byte instruction code. The lower nibble bits of the (M3-0) are don't care ("x"). However, the IO pins should be high-impedance prior to the falling edge of the first data out clock.

If the "Continuous Read Mode" bits M5-4 = (1,0), then the next DTR Fast Read Quad I/O instruction (after CS# is raised and then lowered) does not require the EBH instruction code. This reduces the instruction sequence by eight clocks and allows the Read address to be immediately entered after CS# is asserted low. If the "Continuous Read Mode" bits M5-4 do not equal to (1,0), the next instruction (after CS# is raised and then lowered) requires the first byte instruction code, thus returning to normal operation. It is recommended to input FFh/3FFh on IO0 for the next instruction (8/10 clocks), to ensure M4 = 1 and return the device to normal operation.

Figure 16. DTR Fast Read Quad I/O (Initial instruction or previous M5-4≠10，SPI Mode)

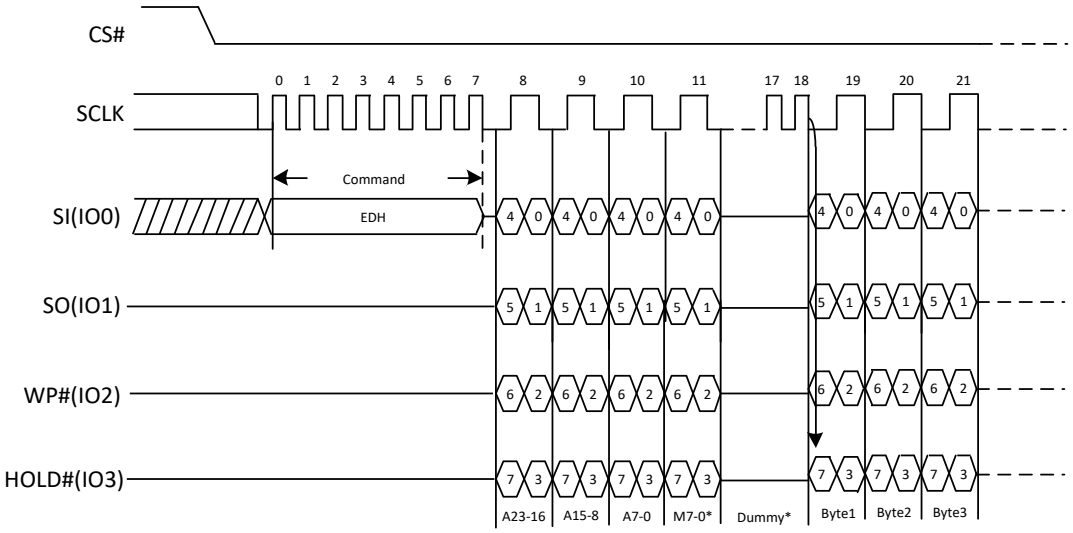

* The number of dummy clocks can be set by DC1 bit

Figure 16a. DTR Fast Read Quad I/O (Previous instruction set M5-4=10，SPI Mode)

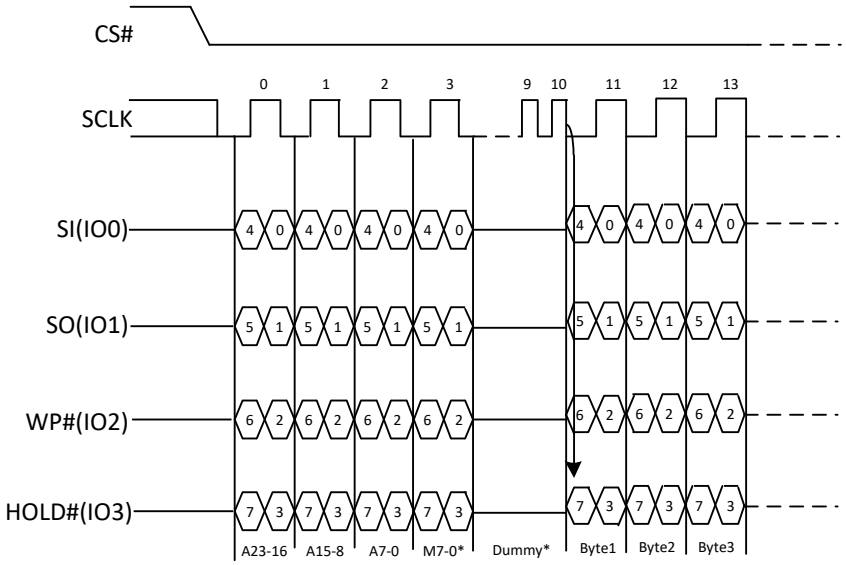

DTR Fast Read Quad I/O with "8/16/32/64-Byte Wrap Around" in Standard SPI mode

The DTR Fast Read Quad I/O instruction can also be used to access a specific portion within a page by issuing a "Set Burst with Wrap" (77H) command prior to EDH. The "Set Burst with Wrap" (77H) command can either enable or disable the "Wrap Around" feature for the following EDH commands. When "Wrap Around" is enabled, the data being accessed can be limited to either an 8, 16, 32 or 64-byte section of a 256-byte page. The output data starts at the initial address specified in the instruction, once it reaches the ending boundary of the 8/16/32/64-byte section, the output will wrap around to the beginning boundary automatically until CS# is pulled high to terminate the command.

The Burst with Wrap feature allows applications that use cache to quickly fetch a critical address and then fill the cache afterwards within a fixed length (8/16/32/64-byte) of data without issuing multiple read commands.

DTR Fast Read Quad I/O (EDH) in QPI Mode

The DTR Fast Read Quad I/O instruction is also supported in QPI mode, as shown in the figure below. In QPI mode, the "Continuous Read Mode" bits M7-0 are also considered as dummy clocks. In the default setting, the data output will follow the Continuous Read Mode bits immediately.

"Continuous Read Mode" feature is also available in QPI mode for DTR Fast Read Quad I/O instruction. Please refer to the description on previous pages.

The "Wrap Around" feature is not available in QPI mode for DTR Fast Read Quad I/O instruction.

The number of dummy clocks for "DTR Fast Read Quad I/O" (EDH) under QPI mode can be set by the Dummy Configuration Bit 1 (DC1) in status register. When the DC1 bit is set to 0, which is default, the number of dummy clock cycles is 8. When the DC1 bit is set to 1, the number of dummy clock cycles is 6.

Figure 16b. DTR Fast Read Quad I/O (Initial instruction or previous M5-4≠10, QPI Mode)

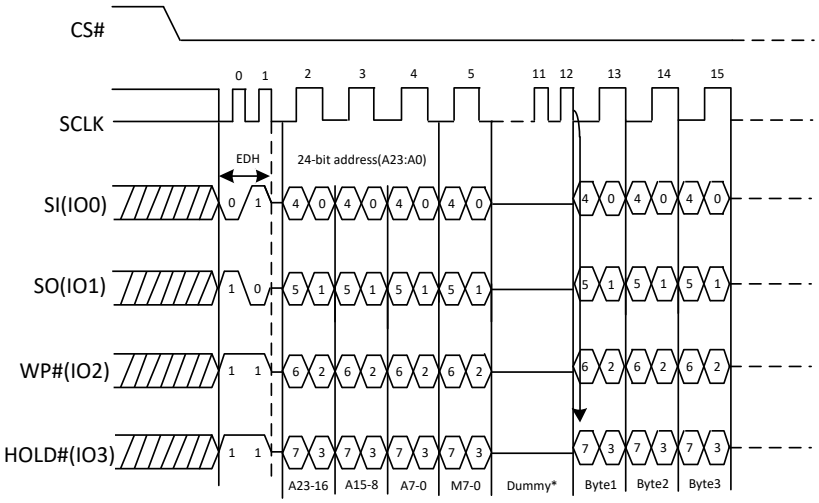

* The number of dummy clocks can be set by DC1 bit

6.2.11. DTR Burst Read With Wrap (0EH)

The “DTR Burst Read with Wrap (0EH)” instruction provides an alternative way to perform the read operation with “Wrap Around” in QPI mode. The instruction is similar to the “Fast Read (0BH)” instruction in QPI mode, except the addressing of the read operation will “Wrap Around” to the beginning boundary of the “Wrap Length” once the ending boundary is reached.

The number of dummy clocks for “DTR Burst Read with Wrap (0EH)” can be set by the Dummy Configuration Bit 1 (DC1) in status register. When the DC1 bit is set to 0, which is default, the number of dummy clock cycles is 8. When the DC1 bit is set to 1, the number of dummy clock cycles is 6.

The “Wrap Length” can be configured by the “Set Read Parameters (C0H)” instruction.

Figure 17. DTR Burst Read With Wrap command Sequence Diagram

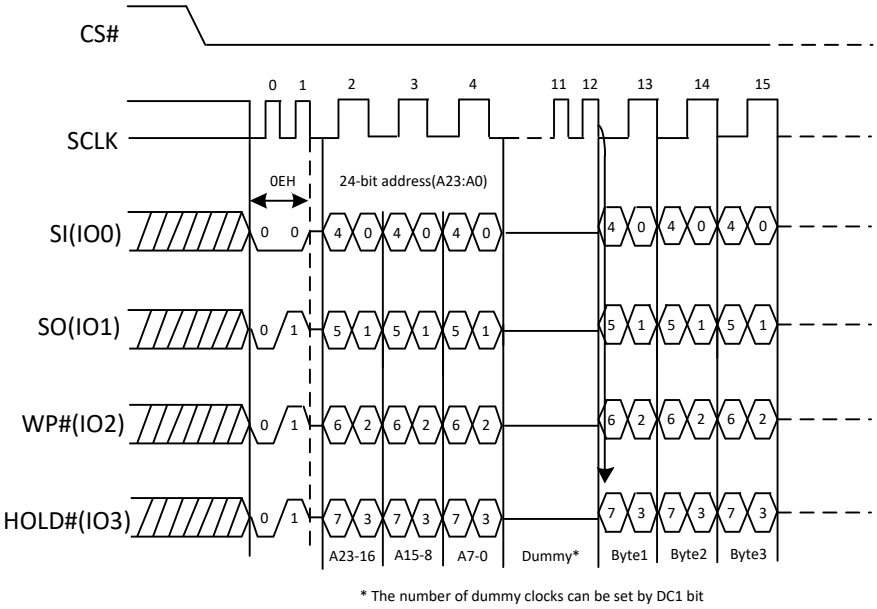

6.2.12. Page Program (02H)

The Page Program (PP) command is for programming the memory. A Write Enable (WREN) command must previously have been executed to set the Write Enable Latch (WEL) bit before sending the Page Program command.

The Page Program (PP) command is entered by driving CS# Low, followed by the command code, three address bytes and at least one data byte on SI. If the 8 least significant address bits (A7-A0) are not all zero, all transmitted data that goes beyond the end of the current page are programmed from the start address of the same page (from the address whose 8 least significant bits (A7-A0) are all zero). CS# must be driven low for the entire duration of the sequence. The Page Program command sequence: CS# goes low →sending Page Program command→ 3-byte address on SI→ at least 1 byte data on SI →CS# goes high. The command sequence is shown in Figure 18. If more than 256 bytes are sent to the device, previously latched data are discarded and the last 256 data bytes are guaranteed to be programmed correctly within the same page. If less than 256 data bytes are sent to device, they are correctly programmed at the requested addresses without having any effects on the other bytes of the same page. CS# must be driven high after the eighth bit of the last data byte has been latched in; otherwise the Page Program (PP) command is not executed.

As soon as CS# is driven high, the self-timed Page Program cycle (whose duration is tPP) is initiated. While the Page Program cycle is in progress, the Status Register may be read to check the value of the Write In Progress (WIP) bit. The Write In Progress (WIP) bit is 1 during the self-timed Page Program cycle, and is 0 when it is completed. At some unspecified time before the cycle is completed, the Write Enable Latch (WEL) bit is reset.

A Page Program (PP) command applied to a page which is protected by the Block Protect (BP4, BP3, BP2, BP1, BP0) is not executed.

Figure 18. Page Program Sequence Diagram

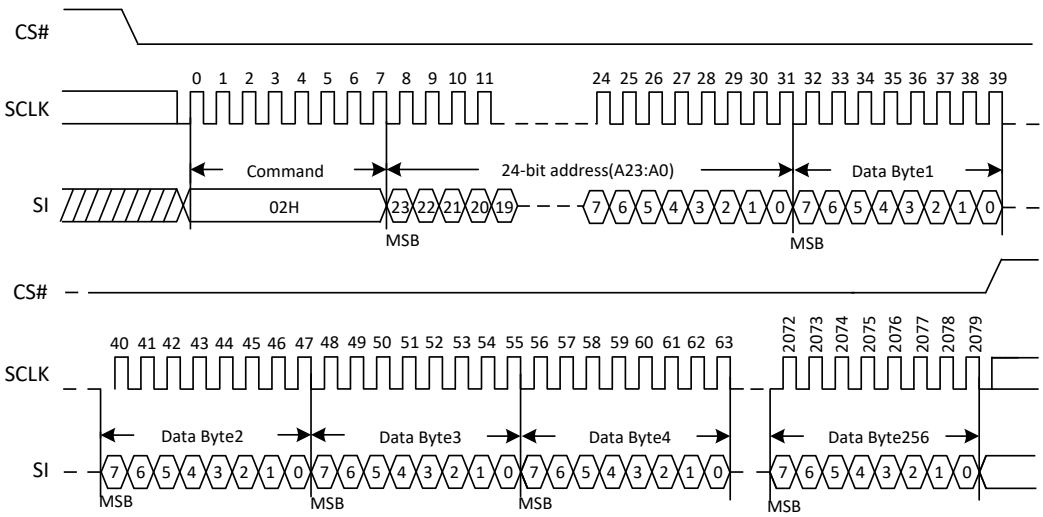

Figure 18a. Page Program Sequence Diagram (QPI)

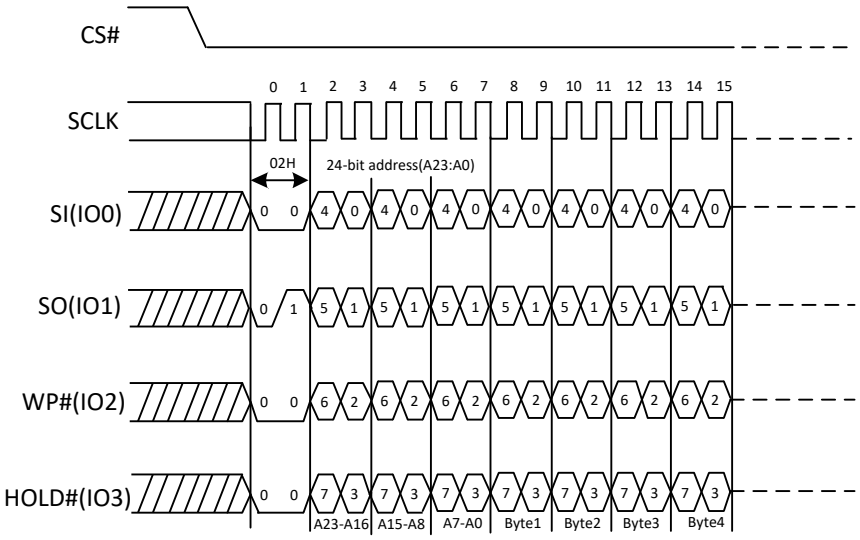

6.2.13. Quad Page Program (32H)

The Quad Page Program command is for programming the memory using four pins: IO0, IO1, IO2, and IO3. To use Quad Page Program, the Quad Enable bit in status register Bit 9 must be set (QE=1). A Write Enable (WREN) command must previously have been executed to set the Write Enable Latch (WEL) bit before sending the Page Program command. The Quad Page Program command is entered by driving CS# Low, followed by the command code (32H), three address bytes and at least one data byte on IO pins.

The command sequence is shown in the figure below. If the 8 least significant address bits (A7-A0) are not all zero, all transmitted data that goes beyond the end of the current page are programmed from the start address of the same page (from the address whose 8 least significant bits (A7-A0) are all zero). If more than 256 bytes are sent to the device, previously latched data are discarded and the last 256 data bytes are guaranteed to be programmed correctly within the same page. If less than 256 data bytes are sent to device, they are correctly programmed at the requested addresses without having any effects on the other bytes of the same page. CS# must be driven high after the eighth bit of the last data byte has been latched in; otherwise the Quad Page Program command will not be executed.

As soon as CS# is driven high, the self-timed Quad Page Program cycle (whose duration is tPP) is initiated. While the Quad Page Program cycle is in progress, the Status Register can be read to check the value of the Write In Progress (WIP) bit. The Write In Progress (WIP) bit is 1 during the self-timed Quad Page Program cycle, and is 0 when it is completed. At some unspecified time before the cycle is completed, the Write Enable Latch (WEL) bit is reset.

A Quad Page Program command applied to a page which is protected by the Block Protect (BP4, BP3, BP2, BP1, BP0) will not be executed.

Figure 19. Quad Page Program Sequence Diagram

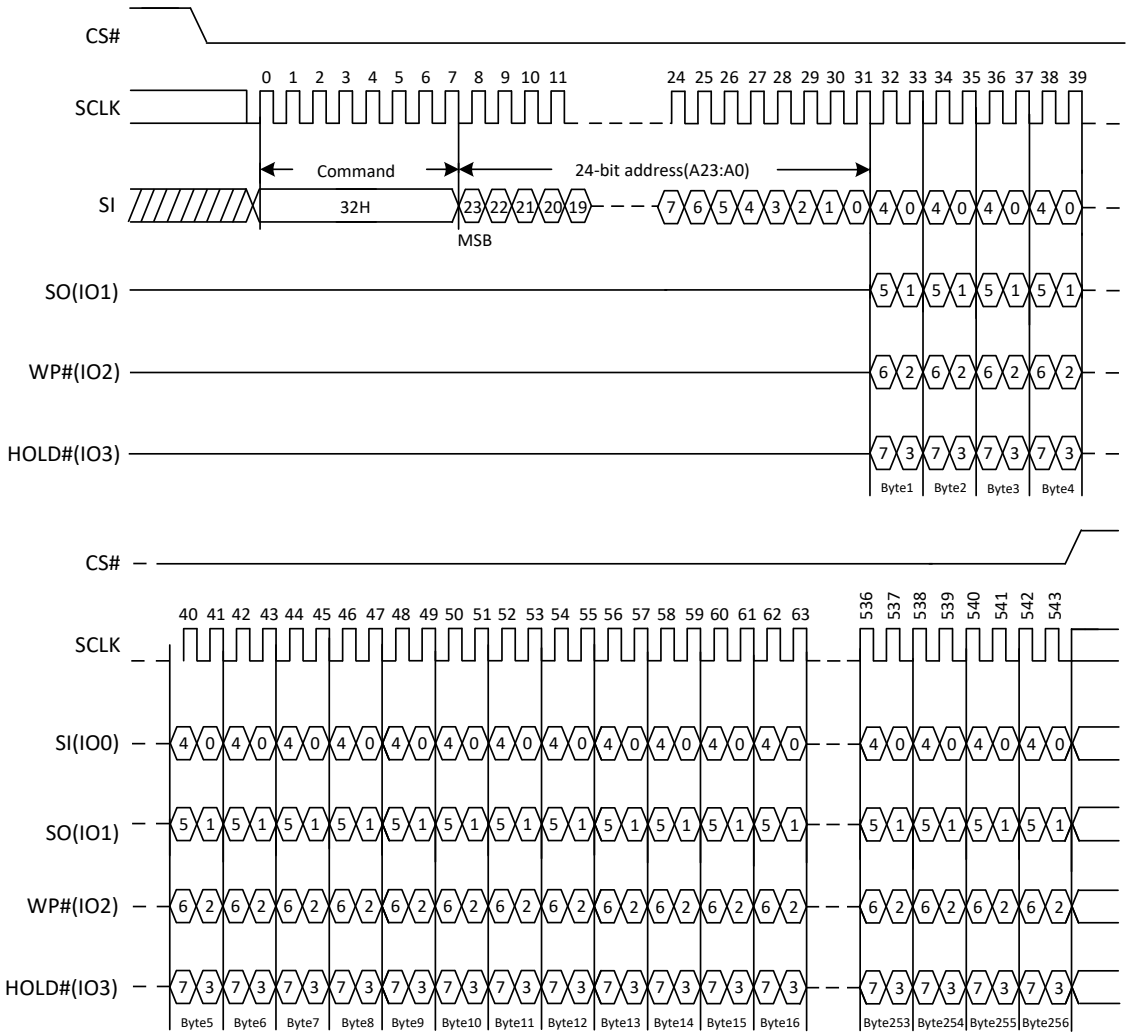

6.2.14. Sector Erase (20H)

The Sector Erase (SE) command is for erasing all the data of the chosen sector. A Write Enable (WREN) command must previously have been executed to set the Write Enable Latch (WEL) bit before sending the Sector Erase command. The Sector Erase (SE) command is entered by driving CS# low, followed by the command code, and 3-address byte on SI. Any address inside the sector is a valid address for the Sector Erase (SE) command.

The Sector Erase command sequence: CS# goes low→ sending Sector Erase command→ 3-byte address on SI→ CS# goes high. The command sequence is shown in Figure 20. CS# must be driven high after the eighth bit of the last address byte has been latched in; otherwise the Sector Erase (SE) command will not be executed. As soon as CS# is driven high, the self-timed Sector Erase cycle (whose duration is tSE) is initiated. While the Sector Erase cycle is in progress, the Status Register can be read to check the value of the Write In Progress (WIP) bit. The Write In Progress (WIP) bit is 1 during the self-timed Sector Erase cycle, and is 0 when it is completed. At some unspecified time before the cycle is completed, the Write Enable Latch (WEL) bit is reset. A Sector Erase (SE) command applied to a sector which is protected by the Block Protect (BP4, BP3, BP2, BP1, BP0) bit (see Table 1.0 & 1.1) will not be executed.

Note: Power disruption during the erase operation will cause incomplete erase, thus it is recommended to perform a re-erase once power resume.

Figure 20. Sector Erase Sequence Diagram

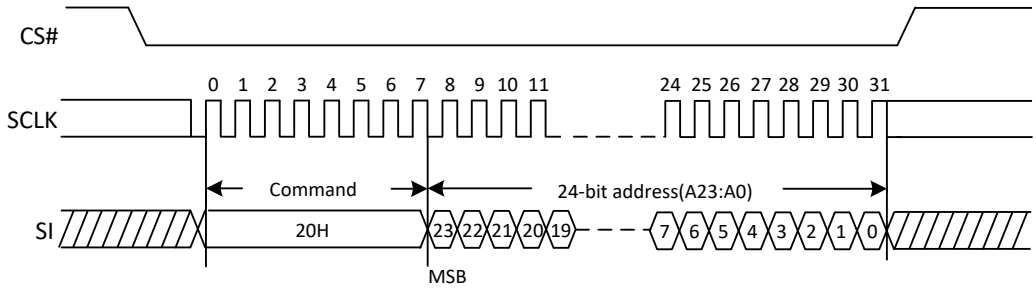

Figure 20a. Sector Erase Sequence Diagram (QPI)

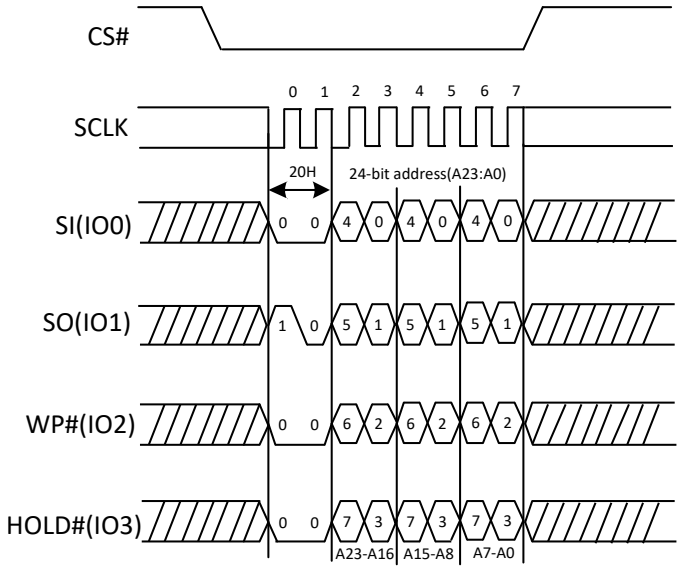

6.2.15. 32k Block Erase (52H)

The 32KB Block Erase (BE) command is for erasing all the data of the chosen block. A Write Enable (WREN) command must previously have been executed to set the Write Enable Latch (WEL) bit before sending the 32KB Block Erase command. The 32KB Block Erase (BE) command is entered by driving CS# low, followed by the command code, and three address bytes on SI, driving CS# high. Any address inside the block is a valid address for the 32KB Block Erase (BE) command.

The 32KB Block Erase command sequence: CS# goes low→ sending 32KB Block Erase command→ 3-byte address on SI→CS# goes high. The command sequence is shown in Figure 21. CS# must be driven high after the eighth bit of the last address byte has been latched in; otherwise the 32KB Block Erase (BE) command will not be executed. As soon as CS# is driven high, the self-timed Block Erase cycle (whose duration is tBE) is initiated. While the Block Erase cycle is in progress, the Status Register can be read to check the value of the Write In Progress (WIP) bit. The Write In Progress (WIP) bit is 1 during the self-timed Block Erase cycle, and is 0 when it is completed. At some unspecified time before the cycle is completed, the Write Enable Latch (WEL) bit is reset. A 32KB Block Erase (BE) command applied to a block which is protected by the Block Protect (BP4, BP3, BP2, BP1, BP0) bits (see Table 1.0 & 1.1) will not be executed.

Note: Power disruption during the erase operation will cause incomplete erase, thus it is recommended to perform a re-erase once power resume.

Figure 21. 32KB Block Erase Sequence Diagram

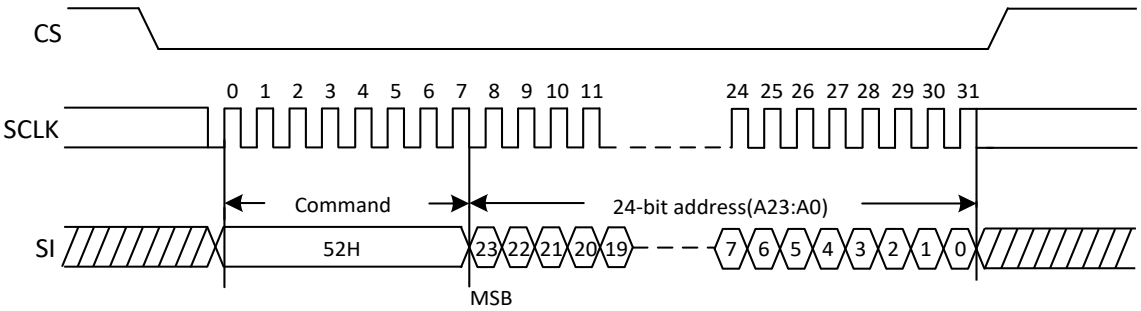

Figure 21a. 32KB Block Erase Sequence Diagram (QPI)

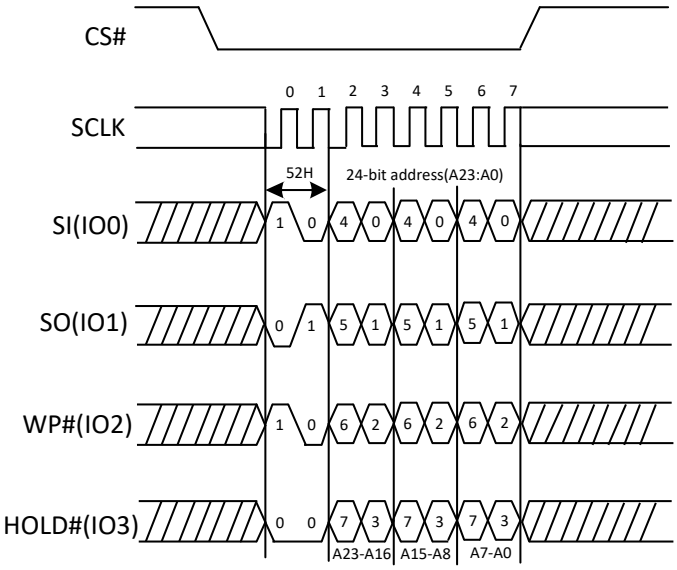

6.2.16. 64k Block Erase (D8H)

The 64KB Block Erase (BE) command is for erasing all the data of the chosen block. A Write Enable (WREN) command must previously have been executed to set the Write Enable Latch (WEL) bit, before sending the 64KB Block Erase command. The 64KB Block Erase (BE) command is entered by driving CS# low, followed by the command code, and three address bytes on SI, driving CS# high. Any address inside the block is a valid address for the 64KB Block Erase (BE) command.

The 64KB Block Erase command sequence: CS# goes low →sending 64KB Block Erase command→ 3-byte address on SI→CS# goes high. The command sequence is shown in Figure 22. CS# must be driven high after the eighth bit of the last address byte has been latched in; otherwise the 64KB Block Erase (BE) command will not be executed. As soon as CS# is driven high, the self-timed Block Erase cycle (whose duration is tBE) is initiated. While the Block Erase cycle is in progress, the Status Register can be read to check the value of the Write In Progress (WIP) bit. The Write In Progress (WIP) bit is 1 during the self-timed Block Erase cycle, and is 0 when it is completed. At some unspecified time before the cycle is completed, the Write Enable Latch (WEL) bit is reset. A 64KB Block Erase (BE) command applied to a block which is protected by the Block Protect (BP4, BP3, BP2, BP1, BP0) bits (see Table 1.0 & 1.1) will not be executed.

Note: Power disruption during the erase operation will cause incomplete erase, thus it is recommended to perform a re-erase once power resume.

Figure 22. 64KB Block Erase Sequence Diagram

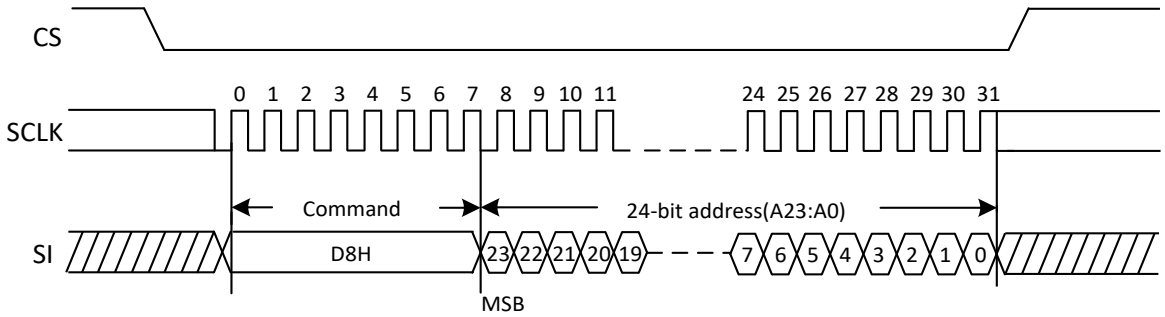

Figure 22a. 64KB Block Erase Sequence Diagram (QPI)

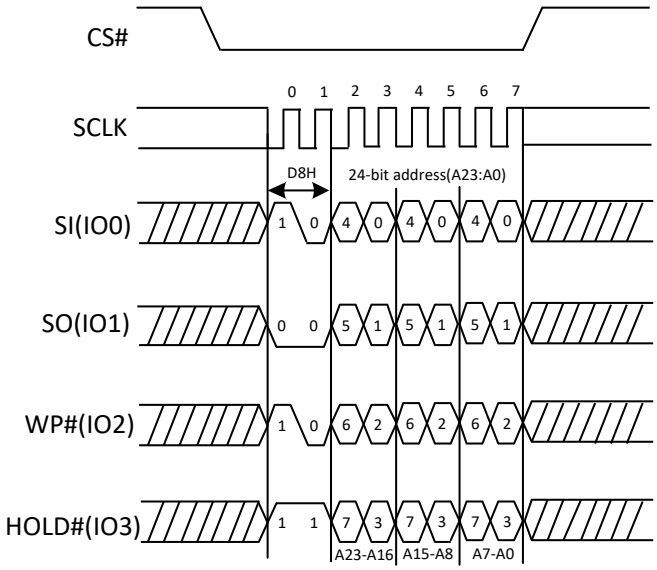

6.2.17. Chip Erase (60H or C7H)

The Chip Erase (CE) command is for erasing all the data of the chip. A Write Enable (WREN) command must previously have been executed to set the Write Enable Latch (WEL) bit, before sending the Chip Erase command .The Chip Erase (CE) command is entered by driving CS# Low, followed by the command code on Serial Data Input (SI).

The Chip Erase command sequence: CS# goes low→ sending Chip Erase command→CS# goes high. The command sequence is shown in Figure 23. CS# must be driven high after the eighth bit of the command code has been latch in, otherwise the Chip Erase command will not be executed. As soon as CS# is driven high, the self-timed Chip Erase cycle (whose duration is tCE) is initiated. While the Chip Erase cycle is in progress, the Status Register can be read to check the value of the Write In Progress (WIP) bit. The Write In Progress (WIP) bit is 1 during the self-timed Chip Erase cycle, and is 0 when it is completed. At some unspecified time before the cycle is completed, the Write Enable Latch (WEL) bit is reset. The Chip Erase (CE) command is ignored if one or more sectors are protected.

Note: Power disruption during the erase operation will cause incomplete erase, thus it is recommended to perform a re-erase once power resume.

Figure 23. Chip Erase Sequence Diagram

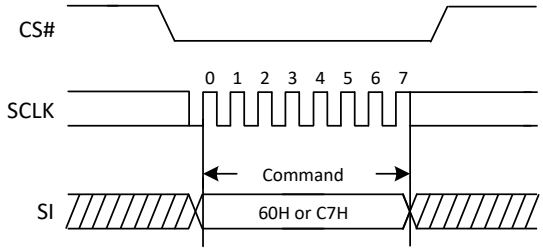

Figure 23a. Chip Erase Sequence Diagram (QPI)

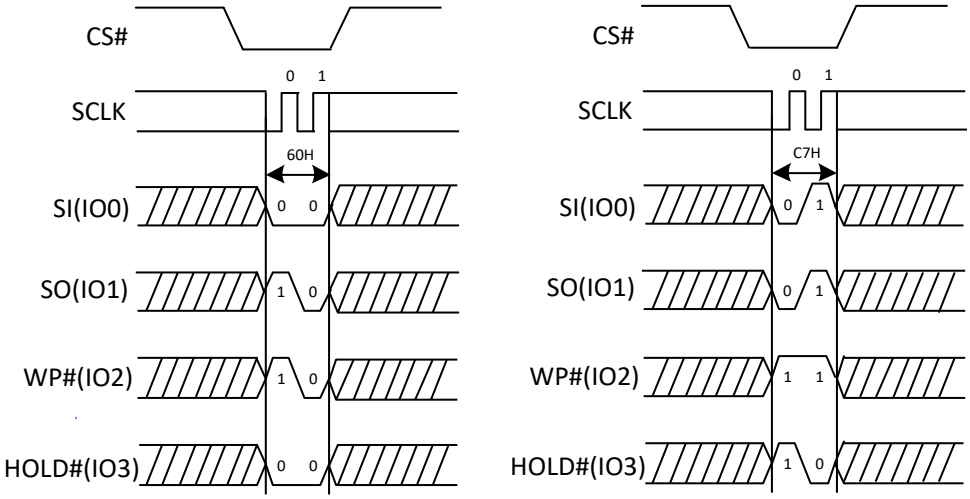

6.3. Device Operations

6.3.1. Enable Reset (66H) and Reset (99H)

If the Reset command is accepted, any on-going internal operation will be terminated and the device will return to its default power-on state and lose all the current volatile settings, such as Volatile Status Register bits, Write Enable Latch status (WEL), Read Parameter setting (P7-P0) and Wrap Bit Setting (W6-W4).

The "Reset (99H)" command sequence as follow: CS# goes low → Sending Enable Reset command → CS# goes high → CS# goes low → Sending Reset command → CS# goes high. Once the Reset command is accepted by the device, the device will take approximately tRST_R to reset. During this period, no command will be accepted. Data corruption may happen if there is an on-going internal Erase or Program operation when Reset command sequence is accepted by the device. It is recommended to check the BUSY bit and the SUS bit in Status Register before issuing the Reset command sequence.

The Enable Reset (66H) command must be issued prior to a Reset (99H) command and any other commands can't be inserted between them. Otherwise, Enable Reset (66H) command will be cleared.

Figure 24. Enable Reset and Reset command Sequence Diagram

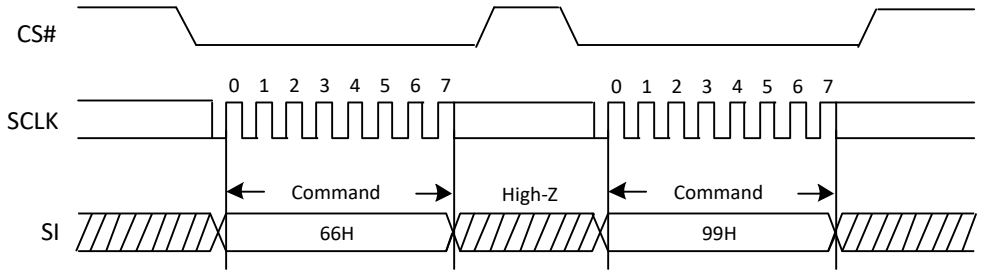

Figure 24a. Enable Reset and Reset command Sequence Diagram (QPI)

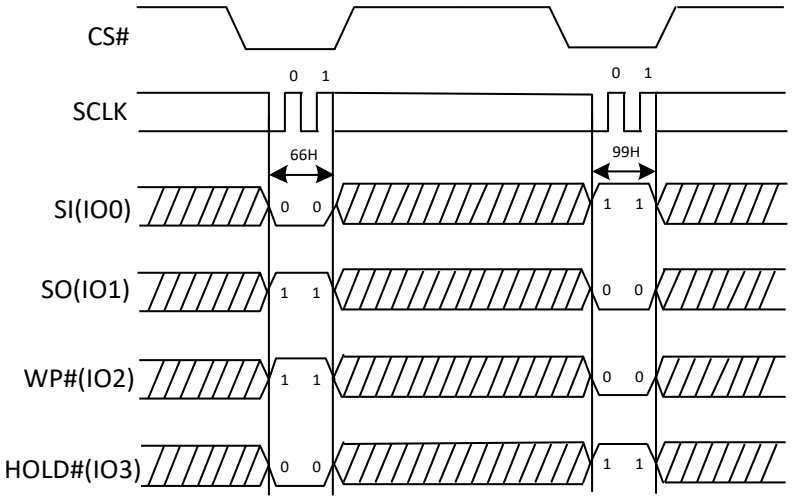

6.3.2. Write Enable (06H)

The Write Enable (WREN) command is for setting the Write Enable Latch (WEL) bit. The Write Enable Latch (WEL) bit must be set prior to every Page Program (PP), Sector Erase (SE), Block Erase (BE), Chip Erase (CE), Erase Security Register, Program Security Register and Write Status Register (WRSR) command. The Write Enable (WREN) command sequence: CS# goes low → Sending the Write Enable command → CS# goes high.

Figure 25.Write Enable Sequence Diagram

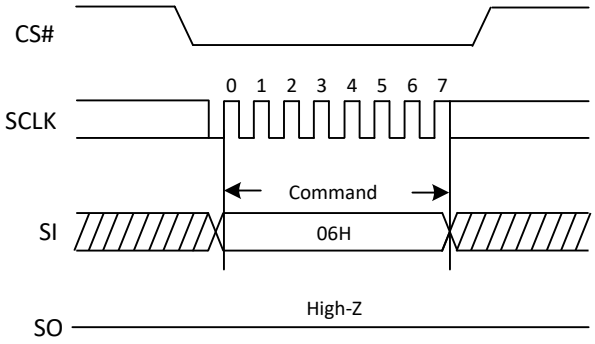

Figure 25a. Write Enable Sequence Diagram (QPI)

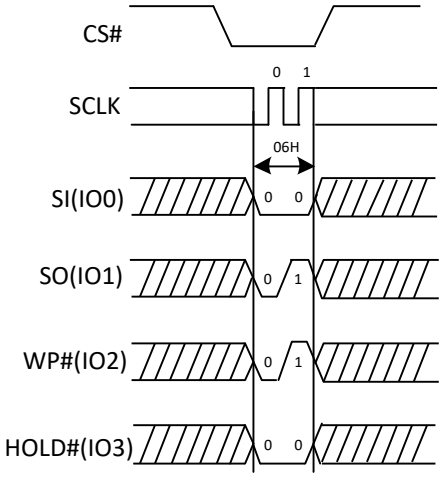

6.3.3. Write Enable for Volatile Status Register (50H)

The non-volatile Status Register bits can also be written to as volatile bits. This gives more flexibility to change the system configuration and memory protection schemes quickly without waiting for the typical non-volatile bit write cycles or affecting the endurance of the Status Register non-volatile bits. The Write Enable for Volatile Status Register command must be issued prior to a Write Status Register command and any other commands can't be inserted between them. Otherwise, Write Enable for Volatile Status Register will be cleared. The Write Enable for Volatile Status Register command will not set the Write Enable Latch bit, it is only valid for the Write Status Register command to change the volatile Status Register bit values.

Figure 26.Write Enable for Volatile Status Register Sequence Diagram

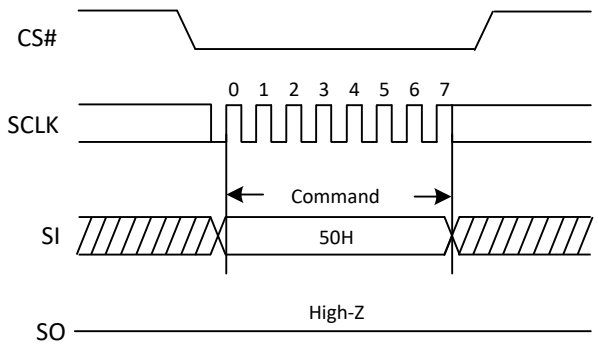

Figure 26a. Write Enable for Volatile Status Register Sequence Diagram (QPI)

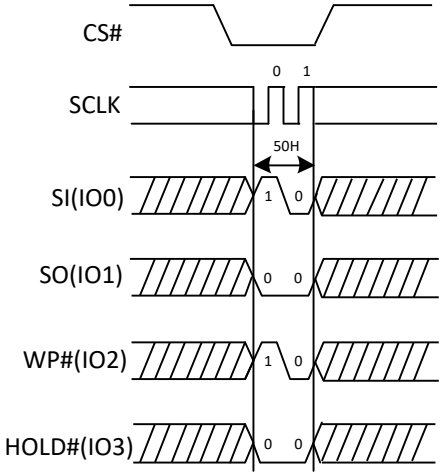

6.3.4. Write Disable (04H)

The Write Disable command is for resetting the Write Enable Latch (WEL) bit. The Write Disable command sequence: CS# goes low → Sending the Write Disable command → CS# goes high. The WEL bit is reset by following condition: Power-up and upon completion of the Write Status Register, Page Program, Sector Erase, Block Erase and Chip Erase commands.

Figure 27. Write Disable Sequence Diagram

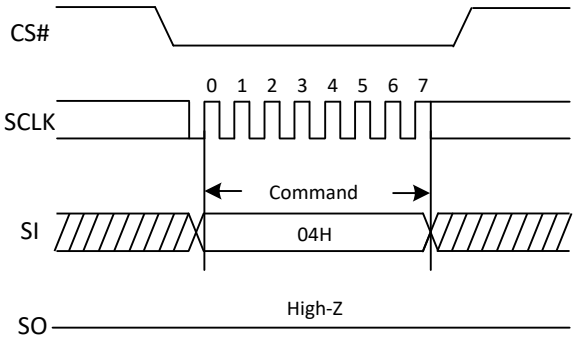

Figure 27a. Write Disable Sequence Diagram (QPI)

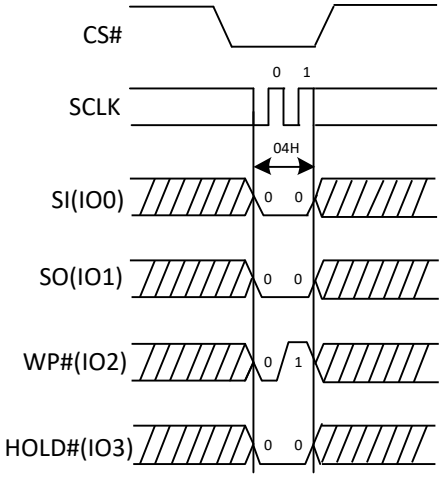

6.3.5. Program Erase Suspend (75H)

The Program/Erase Suspend command "75H", allows the system to interrupt a page program or sector/block erase operation and then read data from any other sector or block. The Write Status Register command (01H/31H/11H) and Erase/Program Security Registers command (44H,42H) and Erase commands (20H, 52H, D8H, C7H, 60H) and Page Program command (02H / 32H) are not allowed during Program suspend. The Write Status Register command (01H/31H/11H) and Erase Security Registers command (44H) and Erase commands (20H, 52H, D8H, C7H, 60H) are not allowed during Erase suspend. Program/Erase Suspend is valid only during the page program or sector/block erase operation. A maximum of time of "tSUS" (See AC Characteristics) is required to suspend the program/erase operation.

The Program/Erase Suspend command will be accepted by the device only if the SUS bit in the Status Register equal to 0 and WIP bit equal to 1 while a Page Program or a Sector or Block Erase operation is on-going. If the SUS bit equal to 1 or WIP bit equal to 0, the Suspend command will be ignored by the device. The WIP bit will be cleared from 1 to 0 within "tSUS" and the SUS bit will be set from 0 to 1 immediately after Program/Erase Suspend. A power-off during the suspend period will reset the device and release the suspend state. The command sequence is shown in Figure 28.

Figure 28. Program/Erase Suspend Sequence Diagram

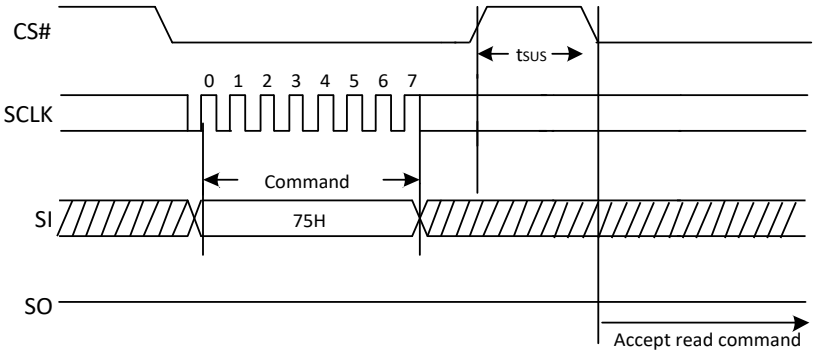

Figure 28a. Program/Erase Suspend Sequence Diagram(QPI)

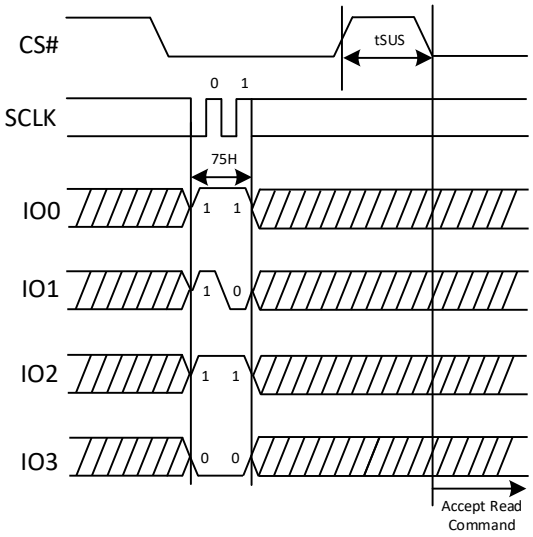

6.3.6. Program Erase Resume (7AH)

The Program/Erase Resume command must be written to resume the program or sector/block erase operation after a Program/Erase Suspend command. The Program/Erase command will be accepted by the device only if the SUS bit equal to 1 and the WIP bit equal to 0. After issued the SUS bit in the status register will be cleared from 1 to 0 immediately, the WIP bit will be set from 0 to 1 within 200ns and the Sector or Block will complete the erase operation or the page will complete the program operation. The Program/Erase Resume command will be ignored unless a Program/Erase Suspend is active. The command sequence is shown in Figure 29.

Figure 29. Program/Erase Resume Sequence Diagram

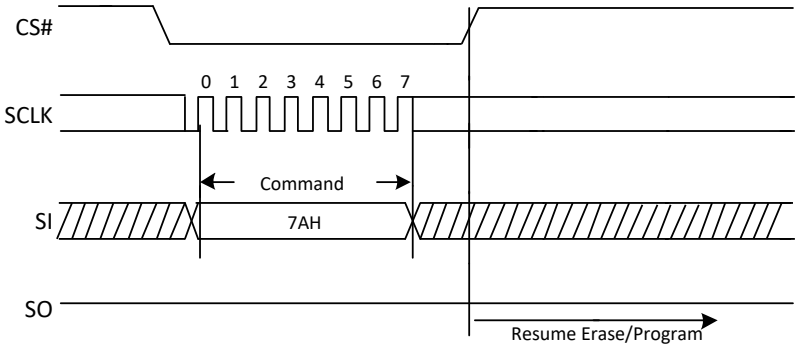

Figure 29a. Program/Erase Resume Sequence Diagram (QPI)

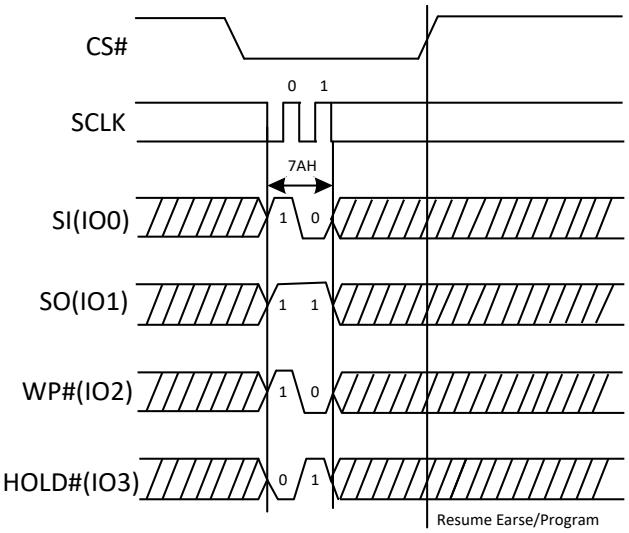

6.3.7. Enable QPI (38H)

The device support both Standard/Dual/Quad SPI and QPI mode. The “Enable QPI (38H)” command can switch the device from SPI mode to QPI mode. See the command Table 2 for all support QPI commands. In order to switch the device to QPI mode, the Quad Enable (QE) bit in Status Register must be set to 1 first, and “Enable QPI (38H)” command must be issued. If the QE bit is 0, the “Enable QPI (38H)” command will be ignored and the device will remain in SPI mode. When the device is switched from SPI mode to QPI mode, the existing Write Enable Latch and the Wrap Length setting will remain unchanged.

Figure 30. Enable QPI mode command Sequence Diagram

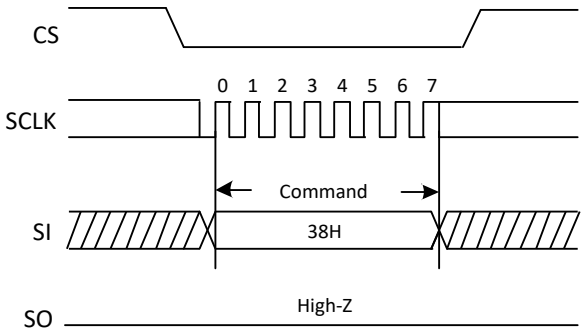

6.3.8. Disable QPI (FFH)

To exit the QPI mode and return to Standard/Dual/Quad SPI mode, the “Disable QPI (FFH)” command must be issued. When the device is switched from QPI mode to SPI mode, the existing Write Enable Latch and the Wrap Length setting will remain unchanged. When the device is in QPI mode, the FFH command will exit continuous read mode and QPI mode at the same time.

Figure 31. Disable QPI mode command Sequence Diagram

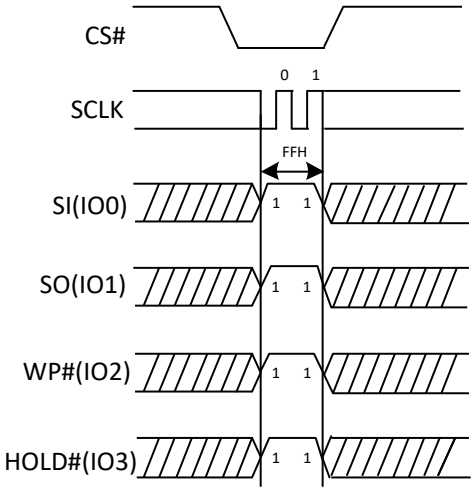

6.3.9. Set Burst With Wrap (77H)

The Set Burst with Wrap command is used in conjunction with "Quad I/O Fast Read (EBH)" and "DTR Fast Read Quad I/O (EDH)" commands to access a fixed length of 8/16/32/64-byte section within a 256-byte page in standard SPI mode. The Set Burst with Wrap command sequence: CS# goes low → Send Set Burst with Wrap command → Send 24 dummy bits Send 8 bits "Wrap bits" CS# goes high.

W6, W5	W4=0		W4=1 (default)	
	Wrap Around	Wrap Length	Wrap Around	Wrap Length
0,0	Yes	8-byte	No	N/A
0,1	Yes	16-byte	No	N/A
1,0	Yes	32-byte	No	N/A
1,1	Yes	64-byte	No	N/A

If the W6-W4 bits are set by the Set Burst with Wrap command, all the following "Quad I/O Fast Read (EBH)" and "DTR Fast Read Quad I/O (EDH)" command will use the W6-W4 setting to access the 8/16/32/64-byte section within any page. To exit the "Wrap Around" function and return to normal read operation, another Set Burst with Wrap command should be issued to set W4=1.

The Wrap Length set by W5-W6 in Standard SPI mode is still valid in QPI mode and can also be re-configured by "Set Read Parameters (C0H) command, and vice versa.

Figure 32. Set Burst with Wrap Sequence Diagram

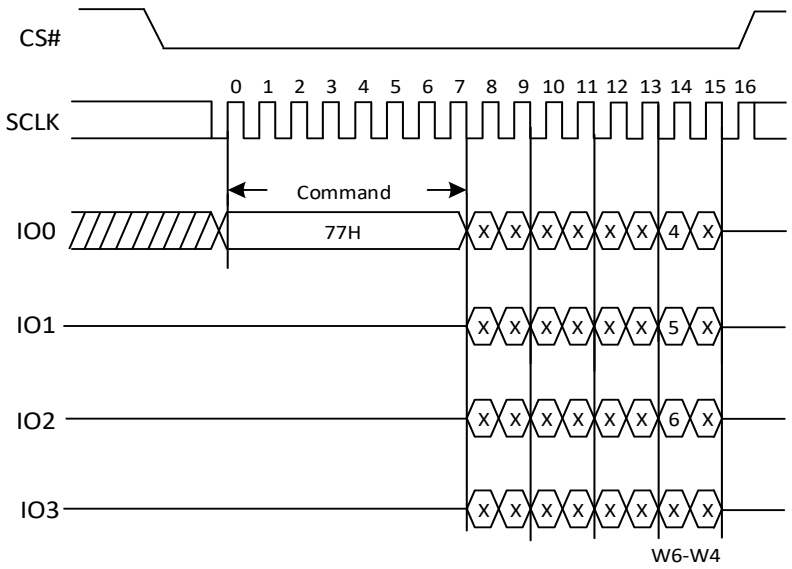

6.3.10. Set Read Parameters (C0H)

In QPI mode, to accommodate a wide range of applications with different needs for either maximum read frequency or minimum data access latency, “Set Read Parameters (C0H)” instruction can be used to configure the number of dummy clocks for “Fast Read (0BH)”, “Fast Read Quad I/O (EBH)” , “Burst Read with Wrap (0CH)” , “Read SFDP (5AH)” , “Read Unique ID (4BH)” and “Read Security Register (48H)” instructions, and to configure the number of bytes of “Wrap Length” for “DTR Burst Read with Wrap (0EH)” and “Burst Read with Wrap (0CH)” instruction. In Standard SPI mode, the “Set Read Parameters (C0H)” instruction is not accepted.

The dummy clocks for various Fast Read instructions in Standard/Dual/Quad SPI mode are fixed and will remain unchanged when the device is switched from Standard SPI mode to QPI mode and requires to be set again, prior to any 0BH or EBH instructions. When the device is switched from QPI mode to SPI mode, the number of dummy clocks goes back to default.

The default “Wrap Length” after a power up or a Reset instruction is 8 bytes, the default number of dummy clocks is 8. The “Wrap Length” is set by W6-4 bit in the “Set Burst with Wrap (77H)” instruction in Standard SPI mode and by P1-P0 in the “Set Read Parameters (C0H)” in the QPI mode. The Wrap Length set by P1-P0 in QPI mode is still valid in SPI mode and can also be re-configured by “Set Burst with Wrap (77H)”, and vice versa.

P5-P4	Dummy Clocks	Maximum Read Frequency	P1-P0	Wrap Length
0 0	2	66MHz	0 0 (Default)	8-byte
0 1	4	80MHz	0 1	16-byte
1 0	6	96MHz	1 0	32-byte
1 1 (Default)	8	104MHz	1 1	64-byte

Figure 33. Set Read Parameters command Sequence Diagram

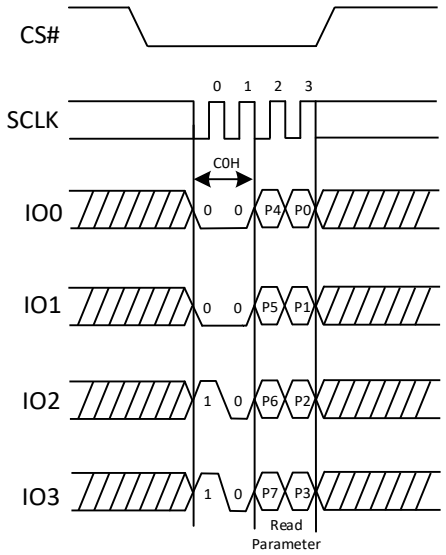

6.3.11. Deep Power Down (B9H)

Executing the Deep Power-Down (DP) command is the only way to put the device in the lowest power consumption mode (the Deep Power-Down Mode). It can also be used as an extra software protection mechanism, since in this mode, the device ignores all Write, Program and Erase commands. Driving CS# high deselects the device, and puts the device in the Standby Mode (if there is no internal cycle currently in progress). But the Standby Mode is different from the Deep Power-Down Mode. The Deep Power-Down Mode can only be entered by executing the Deep Power-Down (DP) command. Once the device has entered the Deep Power-Down Mode, all commands are ignored except the Release from Deep Power-Down and Read Device ID command (ABH) and software reset (66H+99H). This command releases the device from the Deep Power-Down Mode.

The Deep Power-Down Mode automatically stops at Power-Off, and the device always Power-Up in the Standby Mode. The Deep Power-Down (DP) command is entered by driving CS# low, followed by the command code on SI, driving CS# high.

The Deep Power-Down command sequence: CS# goes low→sending Deep Power-Down command→CS# goes high. The command sequence is shown in Figure 34. CS# must be driven high after the eighth bit of the command code has been latched in; otherwise the Deep Power-Down (DP) command will not be executed. As soon as CS# is driven high, it requires a time duration of tDP before the supply current is reduced to ICC2 and the Deep Power-Down Mode is entered. Any input of Deep Power-Down (DP) command, while an Erase, Program or Write cycle is in progress, is rejected without having any effects on the cycle that is in progress.

Figure 34. Deep Power-Down Sequence Diagram

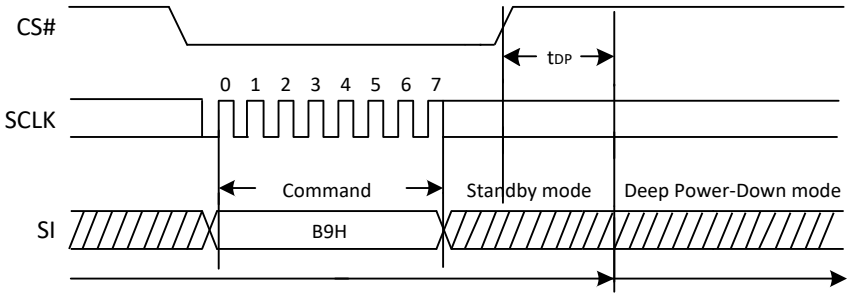

Figure 34a. Deep Power-Down Sequence Diagram (QPI)

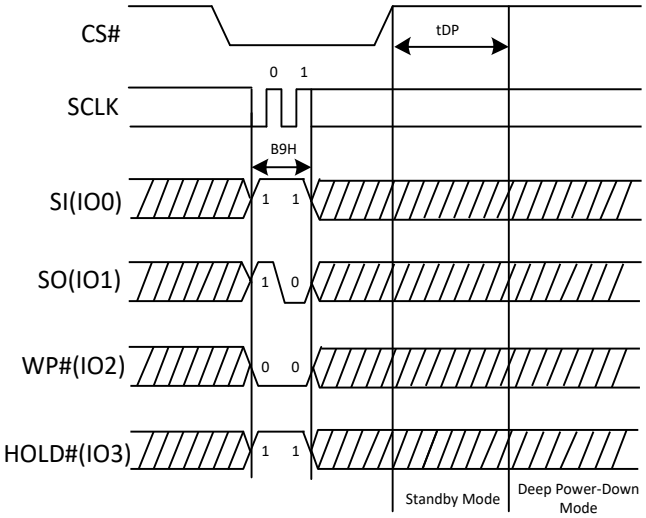

6.3.12. Release From Deep Power-Down (ABH)

The Release from Deep Power-Down and Read Device ID command is a multi-purpose command. It can be used to release the device from Deep Power-Down Mode or obtain the devices electronic identification (ID) number.

To release the device from Deep Power-Down Mode, the command is issued by driving the CS# pin low, shifting the instruction code “ABH” and driving CS# high as shown in Figure 35. Release from Deep Power-Down Mode will take the time duration of tRES1 (See AC Characteristics) before the device resume to normal state and other command are accepted. The CS# pin must remain high during the tRES1 time duration.

When the command is used only to obtain the Device ID while the flash memory is not in Deep Power-Down Mode, the command is initiated by driving the CS# pin low and shifting the instruction code “ABH” followed by 3 dummy bytes. The Device ID bits are then shifted out on the falling edge of SCLK with most significant bit (MSB) first as shown in Figure 35b. The Device ID value is listed in Manufacturer and Device Identification table. The Device ID can be read continuously. The command is completed by driving CS# high.

When the command is used to release the device from Deep Power-Down Mode and obtain the Device ID, the command is the same as previously described, and shown in Figure 35b, except that after CS# is driven high it must remain high for a time duration of tRES2 (See AC Characteristics). After this time duration the device will resume to normal mode and other command will be accepted. If the Release from Deep Power-Down and Read Device ID command is issued while an Erase, Program or Write cycle is in process (when WIP equal 1) the command will be ignored and will not affect the current cycle.

Figure 35. Release Power-Down Sequence Diagram

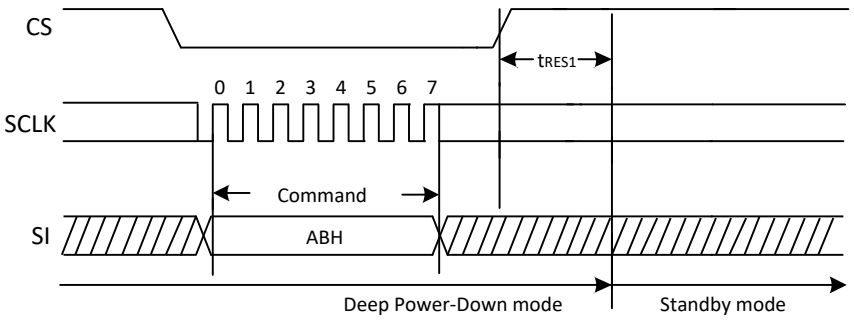

Figure 35a. Release Power-Down Sequence Diagram (QPI)

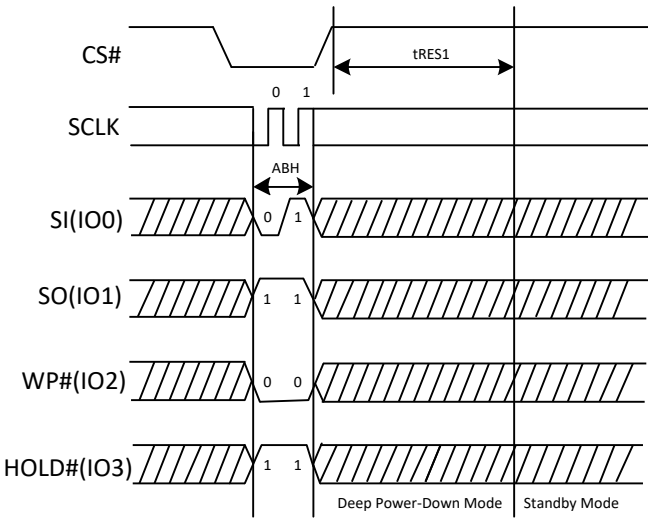

Figure 35b. Release From Deep Power-Down/Read Device ID Sequence Diagram

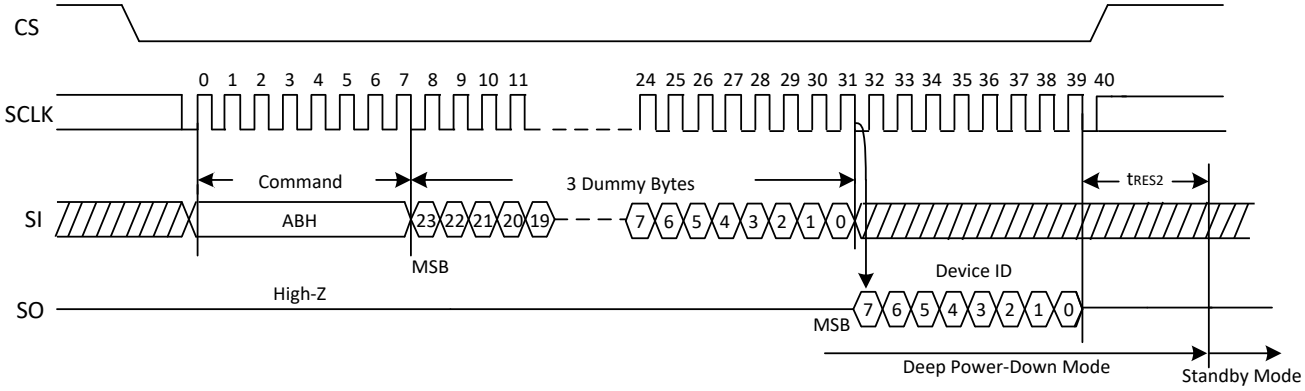

Release From Deep Power-Down/Read Device ID (ABH) in QPI mode

The Release From Deep Power-Down/Read Device ID command is also supported in QPI mode. See the figure below, In QPI mode, the number of dummy clocks is configured by the "Set Read Parameters (C0H)" command to accommodate a wide range application with different needs for either maximum Fast Read frequency or minimum data access latency.

Figure 35c. Release Power-Down/Read Device ID Sequence Diagram (QPI)

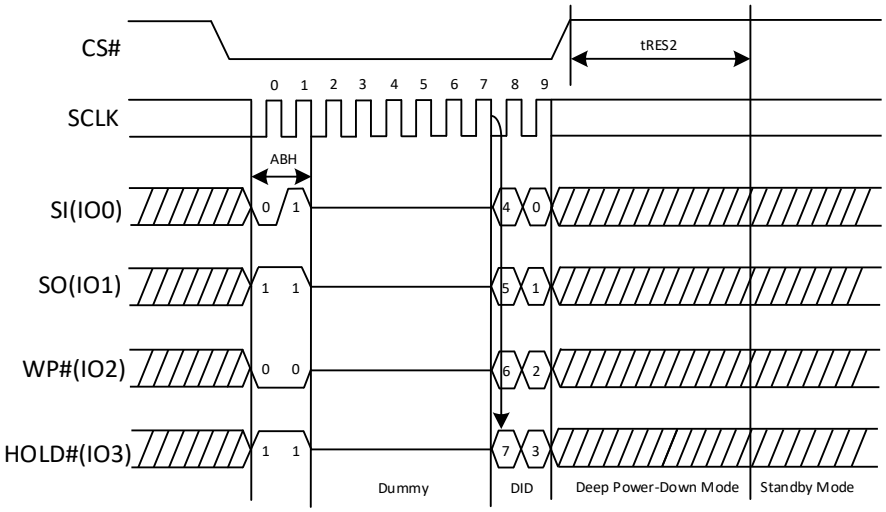

6.4. One-Time Programmable (OTP) Operations

6.4.1. Read Security Register (48H)

The Read Security Registers command is similar to Fast Read command. The command is followed by a 3-byte address (A23-A0) and a dummy byte, each bit being latched-in during the rising edge of SCLK. Then the memory content, at that address, is shifted out on SO, each bit being shifted out, at a Max frequency fC, during the falling edge of SCLK. The first byte addressed can be at any location. The address is automatically incremented to the next address after each byte of data is shifted out. Once the A9-A0 address reaches the last byte of the register (Byte 3FFH), it will reset to 000H, the command is completed by driving CS# high.

Address	A23-A16	A15-A12	A11-A10	A9-A0
Security Registers #1	00000000	0001b	00b	Byte Address
Security Registers #2	00000000	0010b	00b	Byte Address
Security Registers #3	00000000	0011b	00b	Byte Address

Figure 36. Read Security Registers command Sequence Diagram

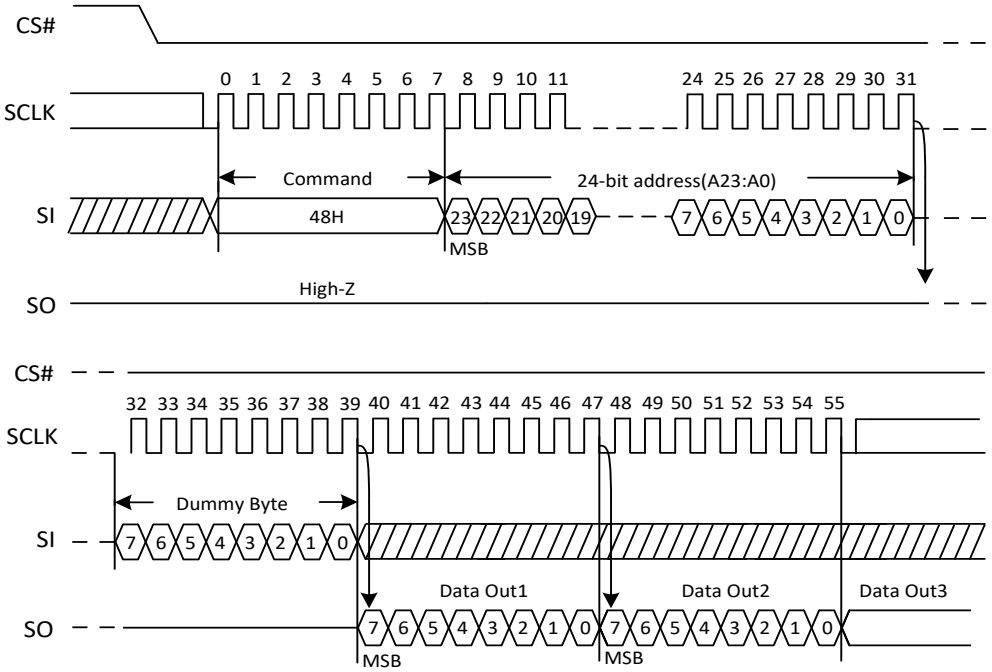

Note: The Byte Address A2-A0 must be 000.

Read Security Register (48H) in QPI mode

The Read Security Register command is also supported in QPI mode. See the figure below, In QPI mode, the number of dummy clocks is configured by the "Set Read Parameters (C0H)" command to accommodate a wide range application with different needs for either maximum Fast Read frequency or minimum data access latency. Depending on the Read Parameter Bits P[5:4] setting, the number of dummy clocks can be configured as either 8/6/4/2.

Figure 36a. Read Security Registers command Sequence Diagram (QPI)

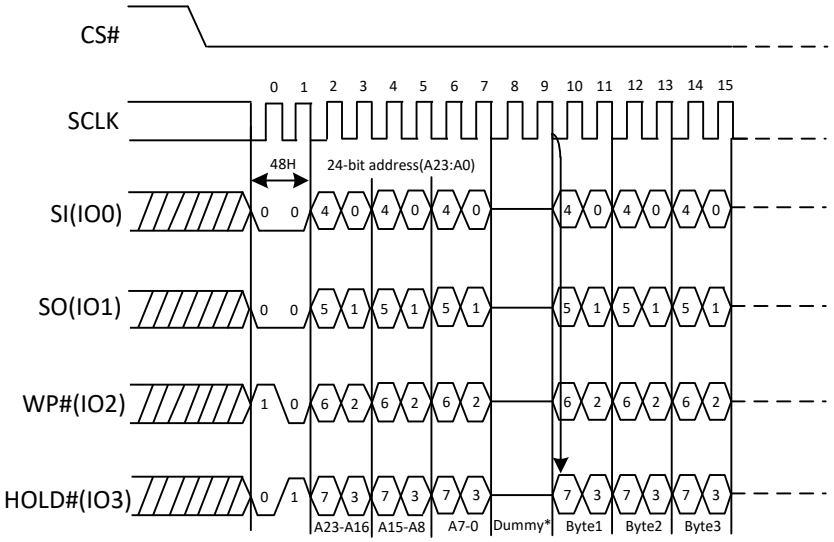

*Set Read Parameters Command (C0H) can set the number of dummy cycles

6.4.2. Program Security Register (42H)

The Program Security Registers command is similar to the Page Program command. It allows from 1 to 1024 bytes Security Registers data to be programmed. A Write Enable (WREN) command must previously have been executed to set the Write Enable Latch (WEL) bit before sending the Program Security Registers command. The Program Security Registers command is entered by driving CS# Low, followed by the command code (42H), three address bytes and at least one data byte on SI. As soon as CS# is driven high, the self-timed Program Security Registers cycle (whose duration is tPP) is initiated. While the Program Security Registers cycle is in progress, the Status Register may be read to check the value of the Write In Progress (WIP) bit. The Write In Progress (WIP) bit is 1 during the self-timed Program Security Registers cycle, and is 0 when it is completed. At some unspecified time before the cycle is completed, the Write Enable Latch (WEL) bit is reset.

If the Security Registers Lock Bit (LB1, LB2, LB3) is set to 1, the corresponding Security Registers (#1, #2, #3) will be permanently locked. Program Security Registers command will be ignored.

Address	A23-A16	A15-A12	A11-A10	A9-A0
Security Registers #1	00000000	0001b	00b	Byte Address
Security Registers #2	00000000	0010b	00b	Byte Address
Security Registers #3	00000000	0011b	00b	Byte Address

Figure 37. Program Security Registers command Sequence Diagram

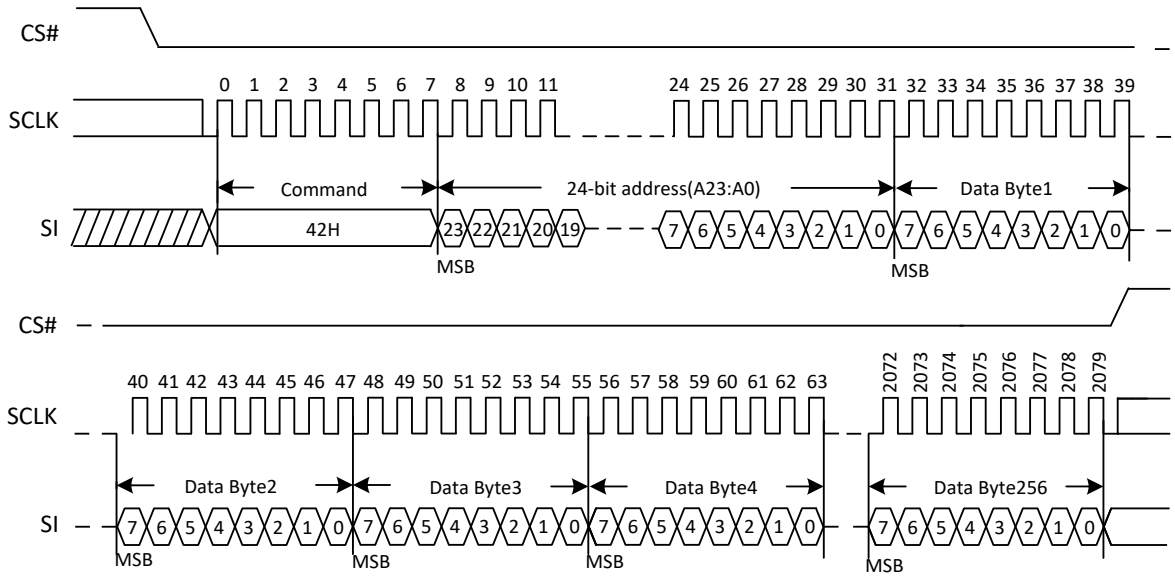

Figure 37a. Program Security Registers command Sequence Diagram (QPI)

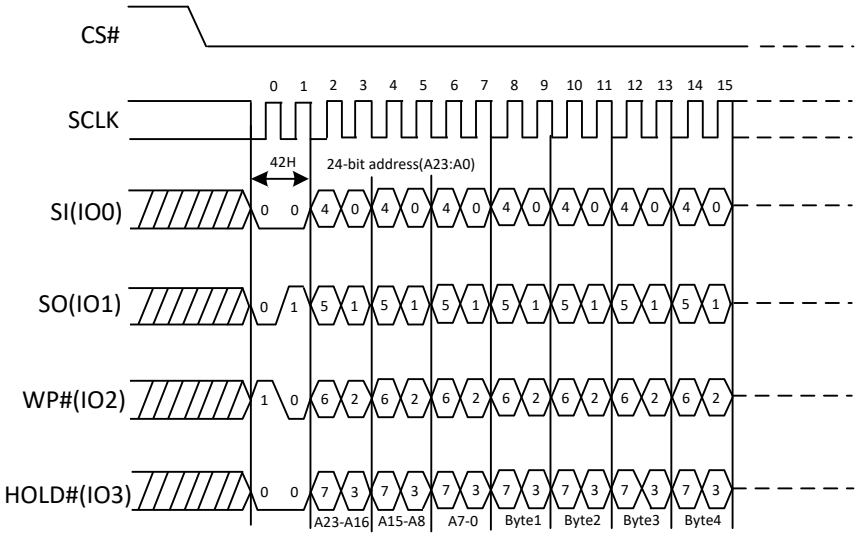

6.4.3. Erase Security Register (44H)

The device provides 3x1024-byte Security Registers which only erased each 1024-byte at once. These registers may be used by the system manufacturers to store security and other important information separately from the main memory array.

The Erase Security Registers command is similar to Sector/Block Erase command. A Write Enable (WREN) command must previously have been executed to set the Write Enable Latch (WEL) bit.

The Erase Security Registers command sequence: CS# goes low → sending Erase Security Registers Command → sending 24-bit address (A23:A0) → CS# goes high. The command sequence is shown in Figure 38. CS# must be driven high after the eighth bit of the command code has been latched in, otherwise the Erase Security Registers command is not executed. As soon as CS# is driven high, the self-timed Erase Security Registers cycle (whose duration is tSE) is initiated. While the Erase Security Registers cycle is in progress, the Status Register may be read to check the value of the Write In Progress (WIP) bit. The Write In Progress (WIP) bit is 1 during the self-timed Erase Security Registers cycle, and is 0 when it is completed. At some unspecified time before the cycle is completed, the Write Enable Latch (WEL) bit is reset. The Security Registers Lock Bit (LB1, LB2, LB3) in the Status Register can be used to OTP protect the security registers. Once the LB bit is set to 1, the corresponding Security Registers (#1, #2, #3) will be permanently locked; the Erase Security Registers command will be ignored.

Address	A23-A16	A15-A12	A11-A10	A9-A0
Security Registers #1	00000000	0001b	00b	Don't Care
Security Registers #2	00000000	0010b	00b	Don't Care
Security Registers #3	00000000	0011b	00b	Don't Care

Figure 38. Erase Security Registers command Sequence Diagram

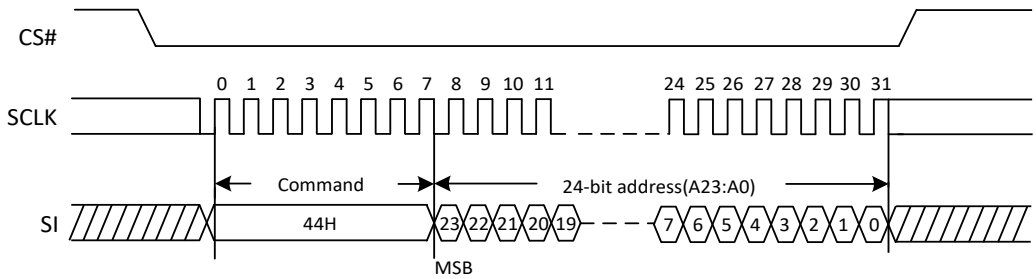

Figure 38a. Erase Security Registers command Sequence Diagram

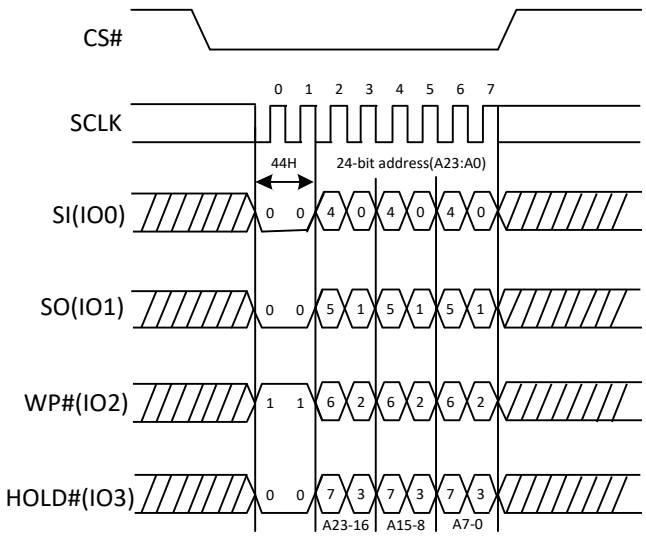

7. ELECTRICAL CHARACTERISTICS

7.1. Power-on Timing

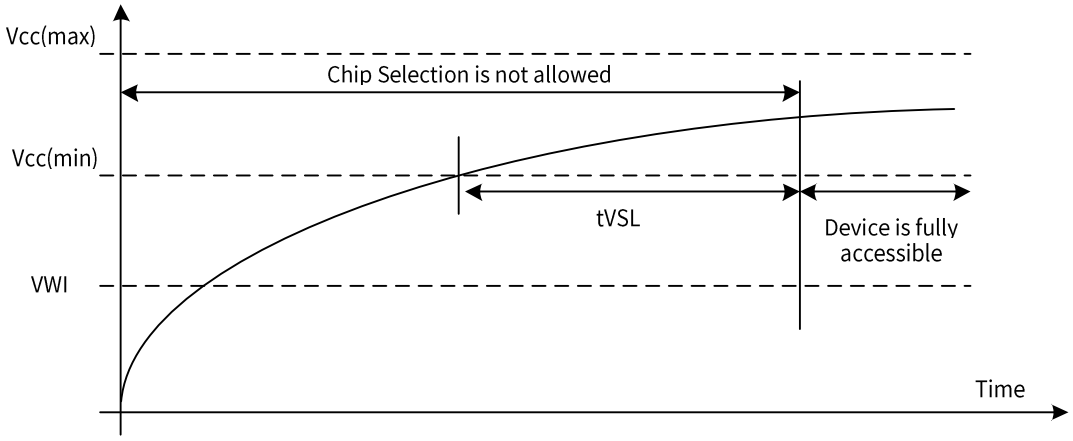

Power-Up Timing and Write Inhibit Threshold

Symbol	Parameter	Min.	Max.	Unit.
t_{VSL}	VCC(min) To CS# Low	100		μs
V_{WI}	Write Inhibit Voltage		1.5	V

7.2. Initial Delivery State

The device is delivered with the memory array erased: all bits are set to 1(each byte contains FFH). All Status Register bits are 0.

7.3. Absolute Maximum Ratings

Parameter	Value	Unit
Ambient Operating Temperature	-40 to 85	°C
Storage Temperature	-65 to 150	°C
Output Short Circuit Current	200	mA
Applied Input/Output Voltage	-0.5 to 2.5	V
VCC	-0.5 to 2.5	V

Input Test Waveform and Measurement Level

Maximum Negative Overshoot Waveform

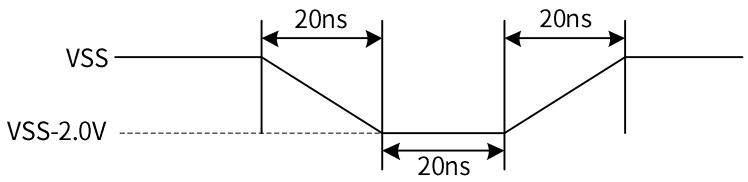

Maximum Positive Overshoot Waveform

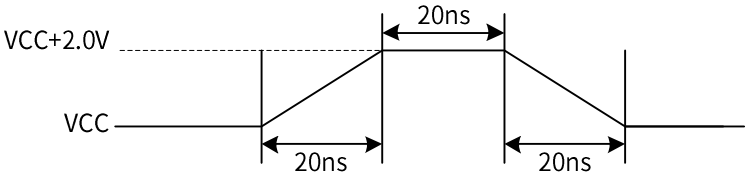

7.4. Capacitance Measurement Condition

Symbol	Parameter	Min.	Typ.	Max.	Unit	Conditions
CIN	Input Capacitance			6	pF	VIN=0V
COUT	Output Capacitance			8	pF	VOUT=0V
CL	Load Capacitance		30		pF	
	Input Rise And Fall time			5	ns	
	Input Pulse Voltage		0.1VCC to 0.8VCC		V	
	Input Timing Reference Voltage		0.2VCC to 0.7VCC		V	
	Output Timing Reference Voltage		0.5VCC		V	

Absolute Maximum Ratings Diagram

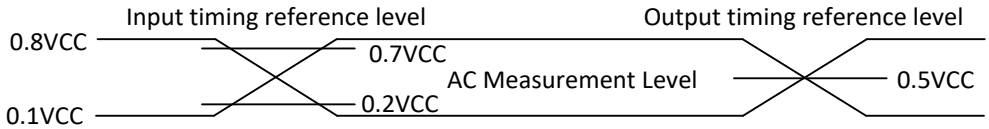

Note：Input pulse rise and fall time are <5ns

7.5. DC Characteristics

(TA=-40°C~85°C, VCC=1.7~2.0V)

Symbol	Parameter	Test Condition	Min.	Typ.	Max.	Unit
ILI(2)	Input Leakage Current				±2	µA
ILO(2)	Output Leakage Current				±2	µA
ICC1(3)	Standby Current	CS#=VCC VIN=VCC or VSS		15	100	µA
ICC2	Deep Power-Down Current	CS#=VCC VIN=VCC or VSS		0.2	80	µA
ICC3	Operating Current(Read)	CLK=0.1VCC/0.9VCC at 104MHz Q=Open(*1,*2,*4 I/O)		8	10	mA
		CLK=0.1VCC/0.9VCC at 80MHz Q=Open(*1,*2,*4 I/O)		6	9	mA
		CLK=0.1VCC/0.9vcc at 80MHz DTR Q=Open(*1,*2,*4 I/O)		11	13	mA
ICC4	Operating Current(PP)	CS#=VCC		12	20	mA
ICC5	Operating Current(WRSR)	CS#=VCC		12	20	mA
ICC6	Operating Current(SE)	CS#=VCC		12	20	mA
ICC7	Operating Current(BE)	CS#=VCC		12	20	mA
ICC8	Operating Current(CE)	CS#=VCC		12	20	mA
VIL	Input Low Voltage		-0.5		0.2VCC	V
VIH(4)	Input High Voltage		0.7VCC		VCC+0.4	V
VOL	Output Low Voltage	IOL=100µA			0.2	V
VOH	Output High Voltage	IOH=-100µA	VCC-0.2			V

Note:

1. Typical values given for TA=25°C, VCC=1.8V.
2. CS#, WP#(IO2) and HOLD#/RESET#(IO3) pins have an internal pull-up resistor and are not suitable for leakage current testing.
3. The Typical of Isb is 1mA under Continuous Read Mode.
4. To maintain signal stability, the VIH minimum for CS # pin is designed to be 0.8VCC.
5. Value guaranteed by design and/or characterization, not 100% tested in production.

7.6. AC Characteristics

(TA=-40°C ~85°C, VCC=1.7~2.0V)

Symbol	Parameter	Min.	Typ.	Max.	Unit
fC1	Serial Clock Frequency For: all commands except Read (03H) & Quad I/O Fast Read (EBH) & Dual I/O Fast Read (BBH) in Continuous Read Mode			104	MHz
fC2	Serial Clock Frequency For: DTR Read			80	MHz
fC3	Serial Clock Frequency For: Quad I/O Fast Read (EBH) & Dual I/O Fast Read (BBH) in Continuous Read Mode (tSHSL > 300ns)			104	MHz
fC4	Serial Clock Frequency For: Quad I/O Fast Read (EBH) & Dual I/O Fast Read (BBH) in Continuous Read Mode (150ns < tSHSL ≤ 300ns)			72	MHz
fC5	Serial Clock Frequency For: Quad I/O Fast Read (EBH) & Dual I/O Fast Read (BBH) in Continuous Read Mode (20ns ≤ tSHSL ≤ 150ns)			44	MHz
fR	Serial Clock Frequency For: Read (03H)			80	MHz
tCLH	Serial Clock High Time	45% PC			ns
tCLL	Serial Clock Low Time	45% PC			ns
tCLCH	Serial Clock Rise Time(Slew Rate)	0.2			V/ns
tCHCL	Serial Clock Fall Time(Slew Rate)	0.2			V/ns
tSLCH	CS# Active Setup Time	5			ns
tCHSH	CS# Active Hold Time	5			ns
tSHCH	CS# Not Active Setup Time	5			ns
tCHSL	CS# Not Active Hold Time	5			ns
tSHSL	CS# High Time (read/write)	20			ns
tSHQZ	Output Disable Time			6	ns
tCLQX	Output Hold Time	1.2			ns
tCLQV	Clock Low To Output Valid			6	ns
tDVCH	Data In Setup Time	2			ns
tCHDX	Data In Hold Time	2.5			ns
tHLCH	Hold# Low Setup Time(relative to Clock)	5			ns
tHHCH	Hold# High Setup Time(relative to Clock)	5			ns
tCHHL	Hold# High Hold Time(relative to Clock)	5			ns
tCHHH	Hold# Low Hold Time(relative to Clock)	5			ns
tHLQZ	Hold# Low To High-Z Output			6	ns
tHHQX	Hold# High To Low-Z Output			8	ns
tWHSL	Write Protect Setup Time Before CS# Low	20			ns
tSHWL	Write Protect Hold Time After CS# High	100			ns
tDP	CS# High To Deep Power-Down Mode			3	µs
tRES1	CS# High To Standby Mode Without Electronic Signature Read			20	µs
tRES2	CS# High To Standby Mode With Electronic Signature Read			20	µs
tRST_R	CS# High To Next Command After Reset (from read)			30	µs
tRST_P	CS# High To Next Command After Reset (from program)			30	µs
tRST_E	CS# High To Next Command After Reset (from erase)			12	ms

tSUS	CS# High To Next Command After Suspend			20	µs
tRS	Latency Between Resume And Next Suspend	300			µs
tW	Write Status Register Cycle Time		1	20	ms
tBP	Byte Programming Time (First Byte)		25	50	us
tBP	Byte Programming Time (After First Byte)		2.5	5	us
tPP	Page Programming Time		0.35	2.4	ms
tSE	Sector Erase Time		40	4000	ms
tBE1	Block Erase Time(32K Bytes)		0.12	5	s
tBE2	Block Erase Time(64K Bytes)		0.2	6	s
tCE	Chip Erase Time		40	100	s

Note:

1. Clock high or Clock low must be more than or equal to 45%PC. PC=1/fC.
2. Typical values given for TA=25°C, VCC=1.8V. Value guaranteed by design and/or characterization, not 100% tested in production.

Serial Input Timing

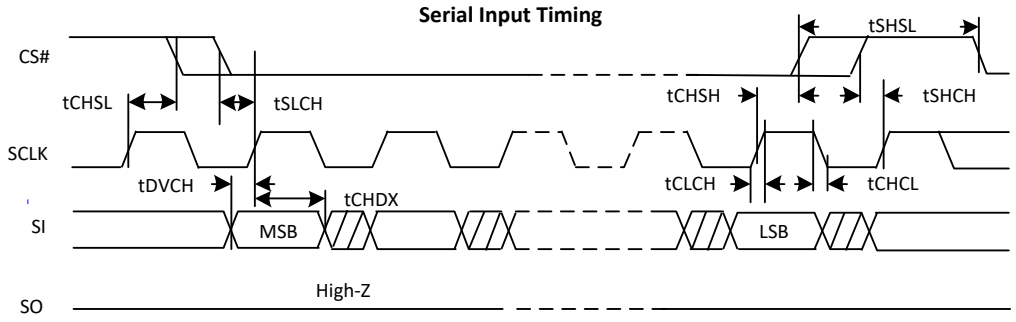

Output Timing

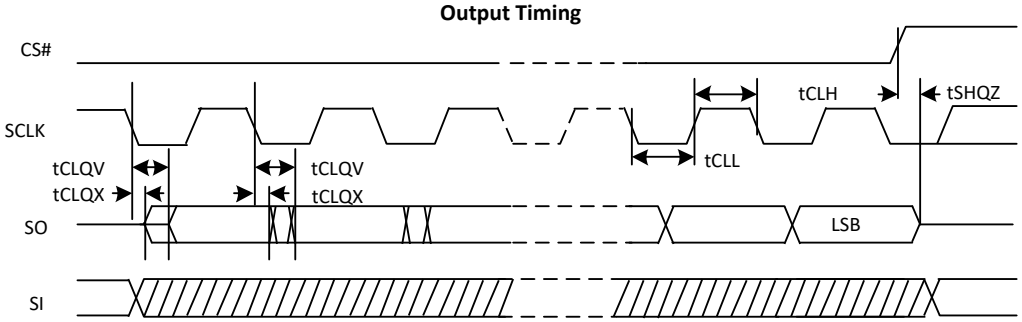

Least significant address bit (LSB) in

Hold Timing

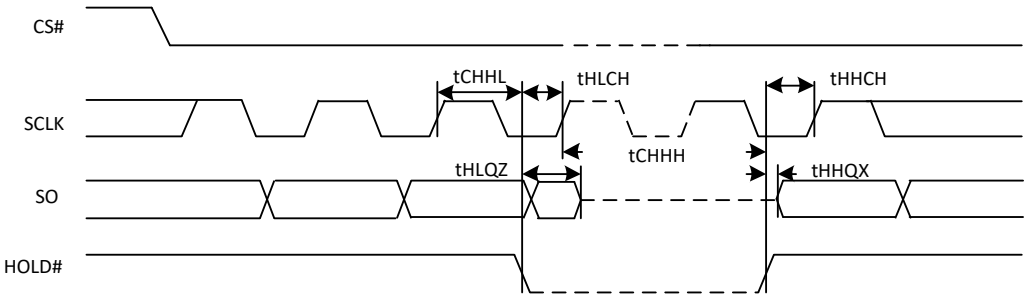

SI do not care during HOLD operation

Resume to Suspend Timing Diagram

8. ORDERING INFORMATION

The ordering part number is formed by a valid combination of the following:

XT 25Q 128F WO I G U -W

Company Prefix

XT = XTX

Product Family

25Q = 1.7~2.0V Serial Flash Memory with 4KB Uniform-Sector

Product Density

128F = 128M bit

Product Package

SS = SOP8 208mil

WO = WSON8 6x5mm

Temperature & Moisture Sensitivity Level

I = Industrial Level Temperature. (-40°C to +85°C), MSL3

Green Code

G = Green/Reach Package

Product Carrier

U = Tube; **T** = Tape & Reel; **A** = Tray

Version "W"

9. PACKAGE INFORMATION

9.1. Package SOP8 208mil

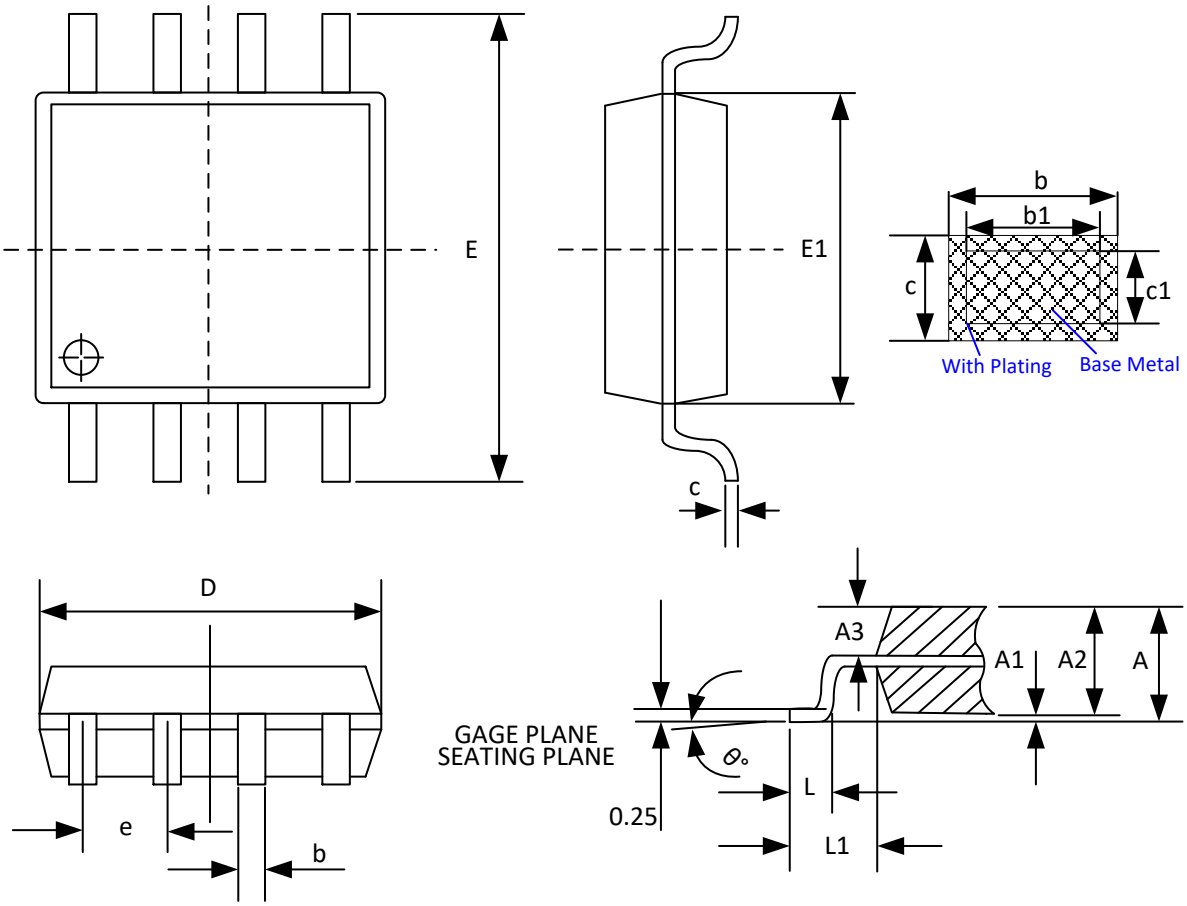

SYMBOL	MILLIMETER		
	MIN	NOM	MAX
A	1.75	1.95	2.15
A1	0.05	0.15	0.25
A2	1.70	1.80	1.90
A3	0.75	0.80	0.85
b	0.33	—	0.51
b1	0.30	—	0.48
c	0.17	—	0.25
c1	0.15	0.20	0.23
D	5.13	5.23	5.33
E	7.70	7.90	8.10
E1	5.18	5.28	5.38
e	1.27 BSC		
L	0.50	0.65	0.80
L1	1.31 REF		
θ	0°	—	8°

9.2. Package WSON8 6x5mm

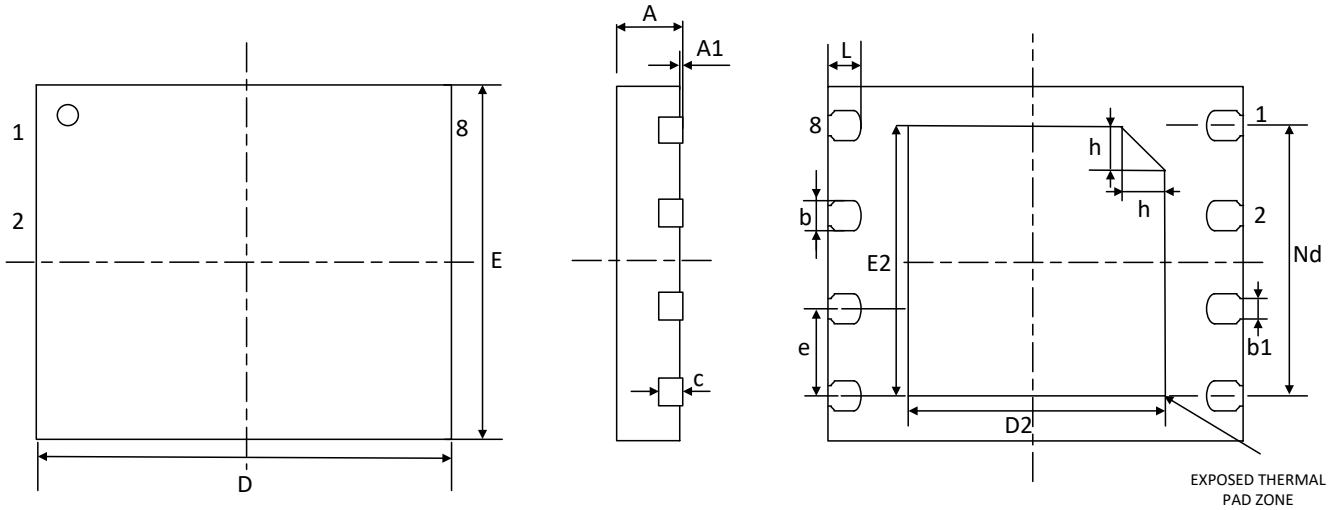

TOP VIEW SIDE VIEW BOTTOM VIEW

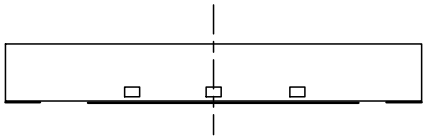

SIDE VIEW

SYMBOL	MILLIMETER		
	MIN	NOM	MAX
A	0.70	0.75	0.80
A1	0.00	0.02	0.05
b	0.35	0.40	0.45
b1	0.25 REF		
c	0.18	0.20	0.25
D	5.90	6.00	6.10
Nd	3.81 BSC		
e	1.27 BSC		
E	4.90	5.00	5.10
D2	3.30	3.40	3.50
E2	3.90	4.00	4.10
L	0.55	0.60	0.65
h	0.30	0.35	0.40

10. REVISION HISTORY

Revision	Description	Date
1.0	Initial version	Apr 13, 2024
1.1	Adjust the single power supply voltage to 1.7~2.0V. Added FC5 in AC Characteristics.	Jun 25, 2024