XT25F08F

Quad IO Serial NOR Flash

Datasheet

* Information furnished is believed to be accurate and reliable. However, XTX Technology Inc. assumes no responsibility for the consequences of use of such information or for any infringement of patents of other rights of third parties which may result from its use. No license is granted by implication or otherwise under any patent rights of XTX Technology Inc. Specifications mentioned in this publication are subjected to change without notice. This publication supersedes and replaces all information previously supplied. XTX Technology Inc. products are not authorized for use as critical components in life support devices or systems without express written approval of XTX Technology Inc. The XTX logo is a registered trademark of XTX Technology Inc. All other names are the property of their respective own.

Serial NOR Flash Memory

3.3V Multi I/O with 4KB, 32KB & 64KB Sector/Block Erase

- **8M-bit Serial Flash**
  - 1024K-byte
  - 256 bytes per programmable page
- **Support SFDP & Unique ID**
- **Standard, Dual, Quad SPI**
  - Standard SPI: SCLK, CS#, SI, SO, WP#, HOLD#
  - Dual SPI: SCLK, CS#, IO0, IO1, WP#, HOLD#
  - Quad SPI: SCLK, CS#, IO0, IO1, IO2, IO3
- **Flexible Architecture**
  - Sector of 4K-byte
  - Block of 32/64K-byte
- **Advanced security Features**
  - 3*1024-Byte Security Registers With OTP Lock
- **Support 128 bits Unique ID**
- **Software/Hardware Write Protection**
  - Write protect all/portion of memory via software
  - Enable/Disable protection with WP# Pin
  - Top or Bottom Block Protection
- **Erase/Program Suspend/Resume**
- **Package Options**
  - See 1.1 Available Ordering OPN
  - All Pb-free packages are compliant RoHS, Halogen-Free and REACH.
- **Allows XIP(execute in place)operation**
  - High speed Read reduce overall XiP instruction fetch time
- **Continuous Read With 8/16/32/64-byte Wrap**
- **Temperature Range & Moisture Sensitivity Level**
  - Industrial Level Temperature. (-40°C to +85°C), MSL3
  - Industrial Plus Level Temperature. (-40°C to +105°C), MSL3
  - Industrial Ultra Level Temperature. (-40°C to +125°C), MSL3
- **Power Consumption**
  - 0.3µA typ. Deep Power-Down current
- **Single Power Supply Voltage**
  - 2.3~3.6V
- **Endurance and Data Retention**
  - Minimum 100,000 Program/Erase Cycle
  - 20-year Data Retention typical
- **High Speed Clock Frequency**
  - 133MHz for fast read with 30pF load
  - Dual I/O Data transfer up to 266Mbit/s
  - Quad I/O Data transfer up to 532Mbit/s
- **Program/Erase Speed**
  - Page Program time: 0.5ms typical
  - Sector Erase time: 55ms typical
  - Block Erase time: 0.15s/0.25s typical
  - Chip Erase time: 3s typical

CONTENTS

1. GENERAL DESCRIPTION 5

1.1. Available Ordering OPN 5

1.2. Connection Diagram 6

1.3. Pin Description 7

1.4. Block Diagram 8

2. MEMORY ORGANIZATION 9

3. DEVICE OPERATION 10

3.1. SPI Mode 10

3.2. Hold Function 10

3.3. The Reset Signaling Protocol (JEDEC 252) 11

4. DATA PROTECTION 12

5. STATUS REGISTER 14

6. COMMANDS DESCRIPTION 17

6.1. Register Access 19

6.1.1. Read Status Register (05H or 35H or 15H) 19

6.1.2. Write Status Register (01H or 31H or 11H) 20

6.1.3. Read Manufacture ID/ Device ID (90H) 21

6.1.4. Read SFDP (5AH) 22

6.1.5. Read Unique ID (4BH) 23

6.1.6. Read Identification (9FH) 24

6.2. Array Access 25

6.2.1. Normal Read (03H) 25

6.2.2. Fast Read (0BH) 25

6.2.3. Dual Output Fast Read (3BH) 26

6.2.4. Dual I/O Fast Read (BBH) 27

6.2.5. Quad Output Fast Read (6BH) 29

6.2.6. Quad I/O Fast Read (EBH) 30

6.2.7. Page Program (02H) 32

6.2.8. Quad Page Program (32H) 33

6.2.9. Sector Erase (20H) 34

6.2.10. 32KB Block Erase (52H) 34

6.2.11. 64KB Block Erase (D8H) 35

6.2.12. Chip Erase (60H or C7H) 35

6.3. Device Operations 36

6.3.1. Enable Reset (66H) and Reset (99H) 36

6.3.2. Write Enable (06H) 36

6.3.3. Write Enable for Volatile Status Register (50H) 37

6.3.4. Write Disable (04H) 37

6.3.5. Program/Erase Suspend (75H) 38
6.3.6. Program/Erase Resume (7AH) 38
6.3.7. Set Burst With Wrap (77H) 39
6.3.8. Deep Power-Down (B9H) 40
6.3.9. Release From Deep Power-Down (ABH) 41
6.4. One-Time Programmable (OTP) Operations 42
6.4.1. Erase Security Register (44H) 42
6.4.2. Program Security Register (42H) 43
6.4.3. Read Security Register (48H) 44
7. ELECTRICAL CHARACTERISTICS 45
7.1. Power-on Timing 45
7.2. Initial Delivery State 45
7.3. Absolute Maximum Ratings 46
7.4. Capacitance Measurement Condition 47
7.5. DC Characteristics 48
7.6. AC Characteristics 49
8. ORDERING INFORMATION 56
9. PACKAGE INFORMATION 57
9.1. Package SOP8 150mil 57
9.2. Package SOP8 150mil For Special Order 58
9.3. Package SOP8 208mil 59
9.4. Package DFN8 2x3x0.4mm 60
10. REVISION HISTORY 61

1. GENERAL DESCRIPTION

The XT25F08F (8M-bit) Serial flash supports the standard Serial Peripheral Interface (SPI), and supports the Dual/Quad SPI: Serial Clock, Chip Select, Serial Data I/O0 (SI), I/O1 (SO), I/O2 (WP#), and I/O3 (HOLD#).

1.1. Available Ordering OPN

OPN	Temperature	Package Type	Package Carrier
XT25F08FSOIGU	-40°C to +85°C	SOP8 150mil	Tube
XT25F08FSOIGT	-40°C to +85°C	SOP8 150mil	Tape & Reel
XT25F08FSOHGU	-40°C to +105°C	SOP8 150mil	Tube
XT25F08FSOUGU	-40°C to +125°C	SOP8 150mil	Tube
XT25F08FSSIGU	-40°C to +85°C	SOP8 208mil	Tube
XT25F08FSSIGT	-40°C to +85°C	SOP8 208mil	Tape & Reel
XT25F08FDTIGT	-40°C to +85°C	DFN8 2x3x0.4mm	Tape & Reel

1.2. Connection Diagram

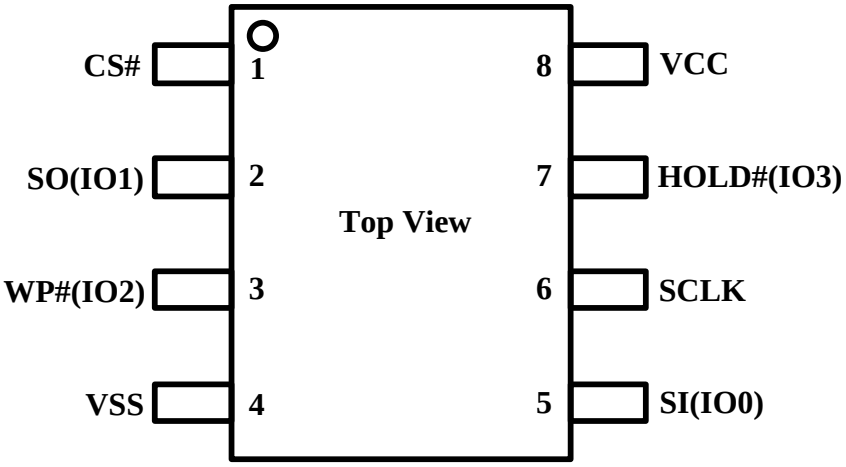

8-pin SOP

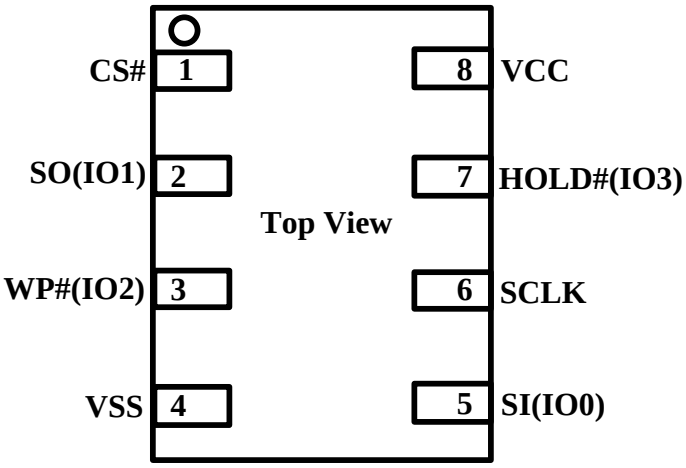

8-pin DFN

1.3. Pin Description

Pin Name	I/O	Description
CS#	I	Chip Select Input
SO (IO1)	I/O	Data Output (Data Input Output 1)
WP# (IO2)	I/O	Write Protect Input (Data Input Output 2)
VSS		Ground
SI (IO0)	I/O	Data Input (Data Input Output 0)
SCLK	I	Serial Clock Input
HOLD# (IO3)	I/O	Hold Input (Data Input Output 3)
VCC		Power Supply

Notes:

1. IO0 and IO1 are used for Standard and Dual SPI instructions
2. IO0 – IO3 are used for Quad SPI instructions, WP# & HOLD# functions are only available for Standard/Dual SPI.

1.4. Block Diagram

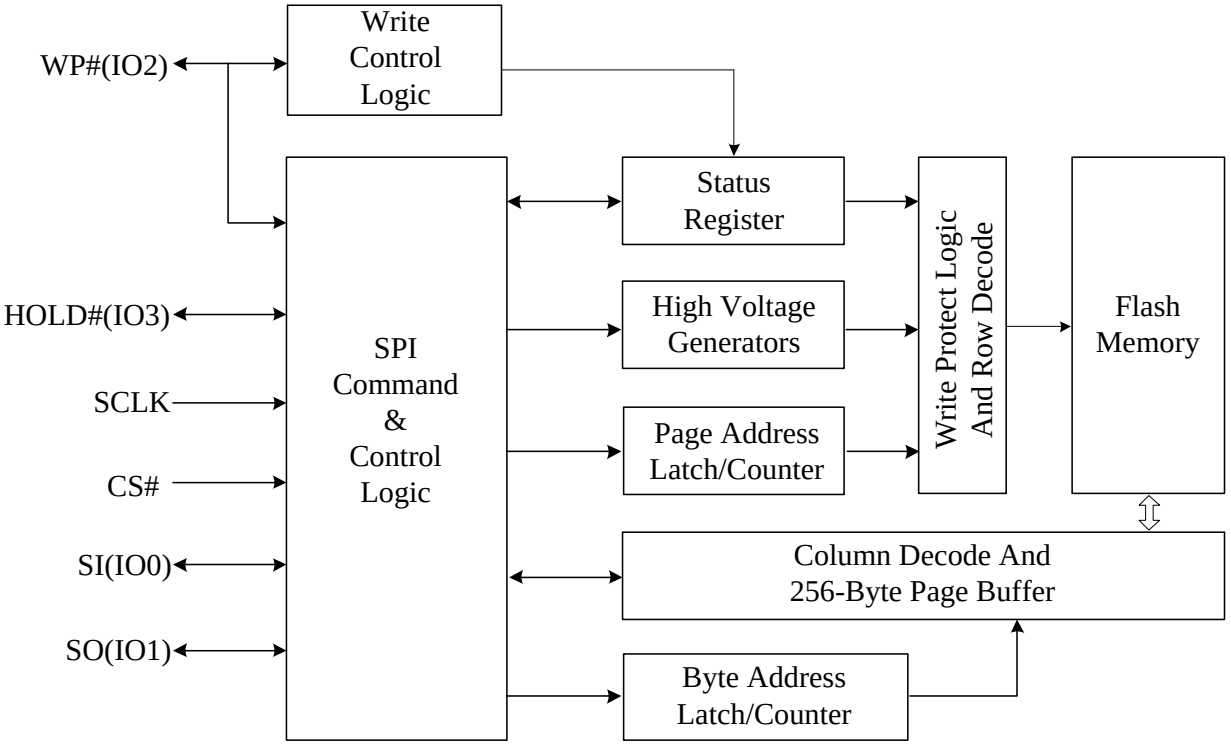

2. MEMORY ORGANIZATION

Uniform Block / Sector Architecture

Block(64K-Byte)	Block(32K-Byte)	Sector(4K-Byte)	Address Range	
15	31	255	0FF000H	0FFFFFH
		……	……	……
		248	0F8000H	0F8FFFH
	30	247	0F7000H	0F7FFFH
		……	……	……
		240	0F0000H	0F0FFFH
14	29	239	0EF000H	0EFFFFH
		……	……	……
		232	0E8000H	0E8FFFH
	28	231	0E7000H	0E7FFFH
		……	……	……
		224	0E0000H	0E0FFFH
……	……	……	……	……
		……	……	……
		……	……	……
1	3	31	01F000H	01FFFFH
		……	……	……
		24	018000H	018FFFH
	2	23	017000H	017FFFH
		……	……	……
		16	010000H	010FFFH
0	1	15	00F000H	00FFFFH
		……	……	……
		8	008000H	008FFFH
	0	7	007000H	007FFFH
		……	……	……
		0	000000H	000FFFH

3. DEVICE OPERATION

3.1. SPI Mode

Standard SPI

The device features a serial peripheral interface on 4 signals bus: Serial Clock (SCLK), Chip Select (CS#), Serial Data Input (SI) and Serial Data Output (SO). Both SPI bus mode 0 and 3 are supported. Input data is latched on the rising edge of SCLK and data shifts out on the falling edge of SCLK.

Dual SPI

The device supports Dual SPI operation when using the “Dual Output Fast Read” and “Dual I/O Fast Read” (3BH and BBH) commands. These commands allow data to be transferred to or from the device at two times the rate of the standard SPI. When using the Dual SPI command the SI and SO pins become bidirectional I/O pins: IO0 and IO1.

Quad SPI

The device supports Quad SPI operation when using the “Quad Output Fast Read”, “Quad I/O Fast Read” (6BH, EBH) commands. These commands allow data to be transferred to or from the device at four times the rate of the standard SPI. When using the Quad SPI command the SI and SO pins become bidirectional I/O pins: IO0 and IO1, and WP# and HOLD# pins become IO2 and IO3. Quad SPI commands require the non-volatile Quad Enable bit (QE) in Status Register to be set.

3.2. Hold Function

The HOLD# signal goes low to stop any serial communications with the device, but doesn’t stop the operation of writing status register, programming, or erasing in progress.

The operation of HOLD needs CS# keeping low, and starts on the falling edge of the HOLD# signal, with SCLK signal being low (if SCLK is not being low, HOLD operation will not start until SCLK is being low). The HOLD condition ends on the rising edge of HOLD# signal with SCLK being low (If SCLK is not being low, HOLD operation will not end until SCLK is being low).

The SO is high impedance, and both SI and SCLK don’t care during the HOLD operation, if CS# drives high during the HOLD operation, it will reset the internal logic of the device. To re-start the communication with the device, the HOLD# must be at high and then the CS# must be at low.

Hold Condition

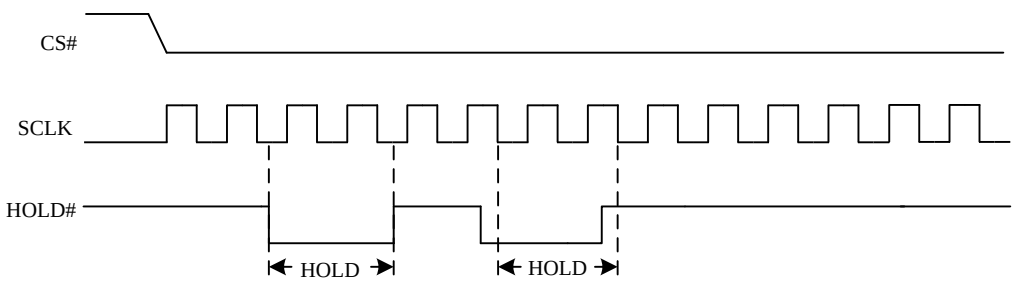

3.3. The Reset Signaling Protocol (JEDEC 252)

The protocol consists of two phases: reset request, and completion (a device internal reset).

Reset Request

1. CS# is driven active low to select the device [Note1]
2. Clock (SCLK) remains stable in either a high or low state [Note 2]
3. SI / IO0 is driven low by the bus master, simultaneously with CS# going active low [Note 3]
4. CS# is driven inactive [Note 4]

Repeat the steps 1-4 each time alternating the state of SI [Note 5]

Note:

1. This powers up the device.
2. This prevents any confusion with a command, as no command bits are transferred (clocked).
3. No SPI bus slave drives SI during CS# low before a transition of SCLK, i.e., slave streaming output active is not allowed until after the first edge of SCLK.
4. The slave captures the state of SI on the rising edge of CS#.
5. SI is low on the first CS#, high on the second, low on the third, high on the fourth (This provides a 5h pattern, to differentiate it from random noise).

Reset Completion

After the fourth CS# pulse, the slave triggers its internal reset.

Timing Diagram and Timing Parameters

Reset Signaling Protocol

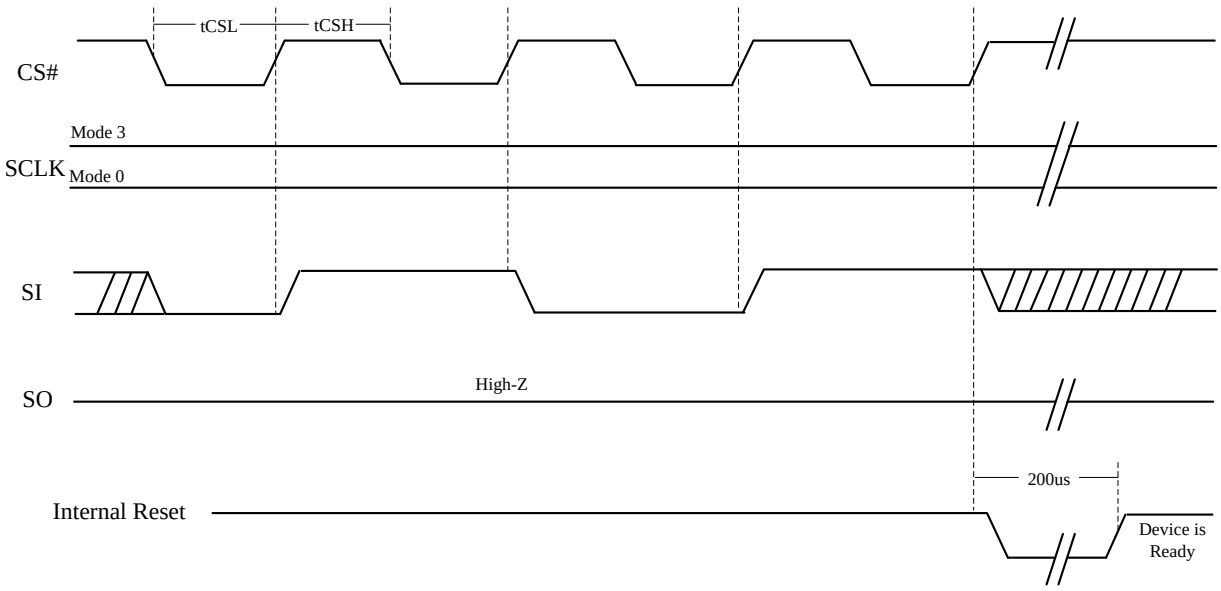

Symbol	Parameter	Min	Typ	Max	Unit.
tCSL	CS# Low Time	500			ns
tCSH	CS# High Time	500			ns
	Setup Time	5			ns
	Hold Time	5			ns

4. DATA PROTECTION

The device provides the following data protection methods:

- Write Enable (WREN) command: The WREN command sets the Write Enable Latch (WEL) bit. The WEL bit will return to reset by the following situation:
  - •Power-Up / Software Reset (66H+99H)
  - •Write Disable (WRDI)
  - •Write Status Register (WRSR)
  - •Page Program (PP)
  - •Sector Erase (SE) / Block Erase (BE) / Chip Erase (CE)
  - •Erase Security Register / Program Security Register
- Software Protection Mode: The Block Protect (BP4, BP3, BP2, BP1, BP0) bits and CMP bit define the section of the memory array that can be read but cannot be changed.
- Hardware Protection Mode: WP# goes low to prevent writing status register.
- Deep Power-Down Mode: In Deep Power-Down Mode, all commands are ignored except the Release from Deep Power-Down Mode command (ABH) and software reset (66H+99H).

Table 1. XT25F08F Protected area size (CMP=0)

Status Register Content					Memory Content			
BP4	**BP3**	**BP2**	**BP1**	**BP0**	**Blocks**	**Addresses**	**Density**	**Portion**
X	X	0	0	0	NONE	NONE	NONE	NONE
0	0	0	0	1	15	0F0000H-0FFFFFH	64KB	Upper 1/16
0	0	0	1	0	14 to 15	0E0000H-0FFFFFH	128KB	Upper 1/8
0	0	0	1	1	12 to 15	0C0000H-0FFFFFH	256KB	Upper 1/4
0	0	1	0	0	8 to 15	080000H-0FFFFFH	512KB	Upper 1/2
0	1	0	0	1	0	000000H-00FFFFH	64KB	Lower 1/16
0	1	0	1	0	0 to 1	000000H-01FFFFH	128KB	Lower 1/8
0	1	0	1	1	0 to 3	000000H-03FFFFH	256KB	Lower 1/4
0	1	1	0	0	0 to 7	000000H-07FFFFH	512KB	Lower 1/2
0	X	1	0	1	0 to 15	000000H-0FFFFFH	1MB	ALL
X	X	1	1	X	0 to 15	000000H-0FFFFFH	1MB	ALL
1	0	0	0	1	15	0FF000H-0FFFFFH	4KB	Top Block
1	0	0	1	0	15	0FE000H-0FFFFFH	8KB	Top Block
1	0	0	1	1	15	0FC000H-0FFFFFH	16KB	Top Block
1	0	1	0	X	15	0F8000H-0FFFFFH	32KB	Top Block
1	1	0	0	1	0	000000H-000FFFH	4KB	Bottom Block
1	1	0	1	0	0	000000H-001FFFH	8KB	Bottom Block
1	1	0	1	1	0	000000H-003FFFH	16KB	Bottom Block
1	1	1	0	X	0	000000H-007FFFH	32KB	Bottom Block

Table 2. XT25F08F Protected area size (CMP=1)

Status Register Content					Memory Content			
BP4	**BP3**	**BP2**	**BP1**	**BP0**	**Blocks**	**Addresses**	**Density**	**Portion**
X	X	0	0	0	0 to 15	000000H-0FFFFFH	1M	ALL
0	0	0	0	1	0 to 14	000000H-0EFFFFH	960KB	Lower 15/16
0	0	0	1	0	0 to 13	000000H-0DFFFFH	896KB	Lower 17/8
0	0	0	1	1	0 to 11	000000H-0BFFFFH	768KB	Lower 3/4
0	0	1	0	0	0 to 7	000000H-07FFFFH	512KB	Lower 1/2
0	1	0	0	1	1 to 15	010000H-0FFFFFH	960KB	Upper 15/16
0	1	0	1	0	2 to 15	020000H-0FFFFFH	896KB	Upper 7/8
0	1	0	1	1	4 to 15	040000H-0FFFFFH	768KB	Upper 3/4
0	1	1	0	0	8 to 15	080000H-0FFFFFH	512KB	Upper 1/2
0	X	1	0	1	NONE	NONE	NONE	NONE
X	X	1	1	X	NONE	NONE	NONE	NONE
1	0	0	0	1	0 to 15	000000H-0FEFFFH	1020KB	L - 255/256
1	0	0	1	0	0 to 15	000000H-0FDFFFH	1016KB	L - 127/128
1	0	0	1	1	0 to 15	000000H-0FBFFFH	1008KB	L - 63/64
1	0	1	0	X	0 to 15	000000H-0F7FFFH	992KB	L - 31/32
1	1	0	0	1	0 to 15	001000H-0FFFFFH	1020KB	U - 255/156
1	1	0	1	0	0 to 15	002000H-0FFFFFH	1016KB	U - 127/128
1	1	0	1	1	0 to 15	004000H-0FFFFFH	1008KB	U - 63/64
1	1	1	0	X	0 to 15	008000H-0FFFFFH	992KB	U - 31/32

5. STATUS REGISTER

Status Register-1

S7	S6	S5	S4	S3	S2	S1	S0
SRP0	**BP4**	**BP3**	**BP2**	**BP1**	**BP0**	**WEL**	**WIP**
Status Register Protection bit	Block Protect bit	Block Protect bit	Block Protect bit	Block Protect bit	Block Protect bit	Write Enable Latch	Erase/Write In Progress
Non-volatile	Non-volatile	Non-volatile	Non-volatile	Non-volatile	Non-volatile	Volatile Read Only	Volatile Read Only

Status Register-2

S15	S14	S13	S12	S11	S10	S9	S8
SUS1	**CMP**	**LB3**	**LB2**	**LB1**	**SUS2**	**QE**	**SRP1**
Erase Suspend	Complement Protect bit	Security Register Lock bit	Security Register Lock bit	Security Register Lock bit	Program Suspend	Quad Enable	Status Register Protection bit
Volatile Read Only	Non-volatile	Non-volatile Writable (OTP)	Non-volatile Writable (OTP)	Non-volatile Writable (OTP)	Volatile Read Only	Non-volatile	Non-volatile

Status Register-3

S23	S22	S21	S20	S19	S18	S17	S16
Reserved	**Reserved**	**Reserved**	**Reserved**	**Reserved**	**Reserved**	**Reserved**	**DC**
Reserved	Reserved	Reserved	Reserved	Reserved	Reserved	Reserved	Dummy Configuration bit
Reserved	Reserved	Reserved	Reserved	Reserved	Reserved	Reserved	Non-volatile

Note: For the initial delivery state, all Status Register bits are 0.

WIP

The Write In Progress (WIP) bit indicates whether the memory is busy in program/erase/write status register progress. When WIP bit sets to 1, means the device is busy in program/erase/write status register progress, when WIP bit sets 0, means the device is not in program/erase/write status register progress.

WEL

The Write Enable Latch (WEL) bit indicates the status of the internal Write Enable Latch. When set to 1 the internal Write Enable Latch is set, when set to 0 the internal Write Enable Latch is reset and no Write Status Register, Program or Erase command is accepted.

BP4, BP3, BP2, BP1, BP0

The Block Protect (BP4, BP3, BP2, BP1, BP0) bits are non-volatile. They define the size of the area to be software protected against Program and Erase commands. These bits are written with the Write Status Register (WRSR) command. When the Block Protect (BP4, BP3, BP2, BP1, BP0) bits are set to 1, the relevant memory area (as defined in Table 1 & 2)

becomes protected against Page Program (PP), Sector Erase (SE) and Block Erase (BE) commands. The Block Protect (BP4, BP3, BP2, BP1, BP0) bits can be written provided that the Hardware Protected mode has not been set. The Chip Erase (CE) command is executed if the Block Protect (BP2, BP1, BP0) bits are 0 and CMP=0 or the Block Protect (BP2, BP1, BP0) bits are 1 and CMP=1.

SRP1, SRP0

The Status Register Protect (SRP1 and SRP0) bits are non-volatile Read/Write bits in the status register. The SRP bits control the type of write protection: software protection, hardware protection, power supply lock-down or one-time programmable protection.

SRP1	SRP0	WP#	Status Register	Description
0	0	X	Software Protected	The Status Register can be written to after a Write Enable command, WEL=1. (Default)
0	1	0	Hardware Protected	WP#=0, the Status Register locked and cannot be written to.
0	1	1	Hardware Unprotected	WP#=1, the Status Register is unlocked and can be written to after a Write Enable command, WEL=1.
1	0	X	Power Supply Lock-Down	Status Register is protected and cannot be written to again until the next Power-Down, Power-Up cycle. [Note 1]
1	1	X	One-Time Program [Note 2]	Status Register is protected and cannot be written to.

Note:

1. When SRP1, SRP0= (1, 0), a Power-Down, Power-Up cycle will change SRP1, SRP0 to (0, 0) state.
2. This feature is available on special order. Please contact XTX for details.

QE

The Quad Enable (QE) bit is a non-volatile Read/Write bit in the Status Register that allows Quad operation. When the QE bit is set to 0 (Default) the WP# pin and HOLD# pin are enable. When the QE pin is set to 1, the Quad IO2 and IO3 pins are enabled.

SUS1, SUS2

The SUS1 and SUS2 bits are read only bits in the status register (S15 and S10) that are set to 1 after executing a Program/Erase Suspend (75H) command (The Erase Suspend will set the SUS1 to 1,and the Program Suspend will set the SUS2 to 1). The SUS1 and SUS2 bits are cleared to 0 by Program/Erase Resume (7AH) command, software reset (66H+99H) command as well as a power-down, power-up cycle.

LB1, LB2, LB3

The LB1, LB2, LB3 bits are non-volatile One Time Program (OTP) bits in Status Register (S11-S13) that provide the write protect control and status to the Security Registers. The default state of LB1-LB3 are 0, the security registers are unlocked. The LB1-LB3 bits can be set to 1 individually using the Write Register instruction. The LB1-LB3 bits are One Time Programmable, once its set to 1, the Security Registers will become read-only permanently.

CMP

The CMP bit is a non-volatile Read/Write bit in the Status Register (S14). It is used in conjunction the BP4-BP0 bits to provide more flexibility for the array protection. Please see the Status register Memory Protection table for details. The default setting is CMP=0.

DC

The Dummy Configuration (DC) bit is non-volatile, which selects the number of dummy cycles between the end of address and the start of read data output. Dummy cycles provide additional latency that is needed to complete the initial read access of the flash array before data can be returned to the host system.

The following dummy cycle tables provide different dummy cycle settings that are configured.

Command	DC bit	Dummy Clock Cycles	Freq.
BBH	0 (Default)	4	104MHz Note1
	1	8	133MHz Note2
EBH	0 (Default)	6	104MHz Note1
	1	10	133MHz Note2

Note1: VCC range=2.7V~3.6V

Note2: VCC range=3.0V~3.6V

6. COMMANDS DESCRIPTION

All commands, addresses and data are shifted in and out of the device, beginning with the most significant bit on the first rising edge of SCLK after CS# is driven low. Then, the one-byte command code must be shifted in to the device, most significant bit first on SI, each bit being latched on the rising edges of SCLK.

See Table 3, every command sequence starts with a one-byte command code. Depending on the command, this might be followed by address bytes, or by data bytes, or by both or none. CS# must be driven high after the last bit of the command sequence has been shifted in. For the command of Read, Fast Read, Read Status Register or Release from Deep Power-Down, and Read Device ID, the shifted-in command sequence is followed by a data-out sequence. CS# can be driven high after any bit of the data-out sequence is being shifted out.

For the command of Page Program, Sector Erase, Block Erase, Chip Erase, Write Status Register, Write Enable, Write Disable or Deep Power-Down command, CS# must be driven high exactly at a byte boundary, otherwise the command is rejected, and is not executed. That is CS# must be driven high when the number of clock pulses after CS# being driven low is an exact multiple of eight. For Page Program, if at any time the input byte is not a full byte, nothing will happen and WEL will not be reset.

Table 3. Commands

Command Name	Command Code	SPI	Address Byte					Dummy Cycle	Data Byte
			Total ADD Byte	Byte1	Byte2	Byte3	Byte4		
Register Access									
Read Status Register_1	05H	√	0					0	1 to ∞
Read Status Register_2	35H	√	0					0	1 to ∞
Read Status Register_3	15H	√	0					0	1 to ∞
Write Status Register_1	01H	√	0					0	1 or 2
Write Status Register_2	31H	√	0					0	1
Write Status Register_3	11H	√	0					0	1
Read Manufactuer/ Device ID	90H	√	3	00	00	00		0	1 to ∞
Read Serial Flash Discoverable Parameters	5AH	√	3	ADD1	ADD2	ADD3		8	1 to ∞
Read Unique ID	4BH	√	0					32 Note1	1 to ∞
Read Identification	9FH	√	0					0	1 to ∞
Array Access									
Read Data	03H	√	3	ADD1	ADD2	ADD3		0	1 to ∞
Fast Read	0BH	√	3	ADD1	ADD2	ADD3		8	1 to ∞
Dual Output Fast Read	3BH	√	3	ADD1	ADD2	ADD3		8	1 to ∞
Dual I/O Fast Read	BBH	√	3	ADD1	ADD2	ADD3		4/8 Note2	1 to ∞
Quad Output Fast Read	6BH	√	3	ADD1	ADD2	ADD3		8	1 to ∞
Quad I/O Fast Read	EBH	√	3	ADD1	ADD2	ADD3		6/10 Note2/3	1 to ∞
Page Program	02H	√	3	ADD1	ADD2	ADD3		0	1 to 256
Quad Page Program	32H	√	3	ADD1	ADD2	ADD3		0	1 to 256

4KB Sector Erase	20H	√	3	ADD1	ADD2	ADD3		0	0
32KB Block Erase	52H	√	3	ADD1	ADD2	ADD3		0	0
64KB Block Erase	D8H	√	3	ADD1	ADD2	ADD3		0	0
Chip Erase	C7/60H	√	0					0	0
Device Operations									
Enable Reset	66H	√	0					0	0
Reset	99H	√	0					0	0
Write Enable	06H	√	0					0	0
Write Enable for Volatile Status Register	50H	√	0					0	0
Write Disable	04H	√	0					0	0
Program Erase Suspend	75H	√	0					0	0
Program Erase Resume	7AH	√	0					0	0
Set Burst with Wrap	77H	√	0					6	0
Deep Power-Down	B9H	√	0					0	0
Release From Deep Power-Down	ABH	√	0					0	0
Release From Deep Power-Down/Read Device ID	ABH	√	0					24	0
One-Time Programmable (OTP) Operations									
Erase Security Register	44H	√	3	ADD1	ADD2	ADD3		0	0
Program Security Register	42H	√	3	ADD1	ADD2	ADD3		0	1 to 256
Read Security Register	48H	√	3	ADD1	ADD2	ADD3		8	1 to ∞

Note:

1. 32 Dummy includes 24 bit Address
2. M7-0 is counted for dummy clocks.
3. The number of dummy clocks is configurable by Status Register DC bit.

Table of ID Definitions:

XT25F08F

Operation Code	MID7-MID0	DID15-DID8	DID7-DID0
9FH	0B	40	14
90H	0B		13
ABH			13

6.1. Register Access

6.1.1. Read Status Register (05H or 35H or 15H)

The Read Status Register (RDSR) command is for reading the Status Register. The Status Register can be read at any time, even while a Program, Erase or Write Status Register cycle is in progress. When one of these cycles is in progress, it is recommended to check the Write In Progress (WIP) bit before sending a new command to the device. It is also possible to read the Status Register continuously. For command code "05H", the SO will output Status Register bits S7~S0. For the command code "35H", the SO will output Status Register bits S15~S8. For the command code "15H", the SO will output Status Register bits S23~S16.

Figure 1. Read Status Register Sequence Diagram

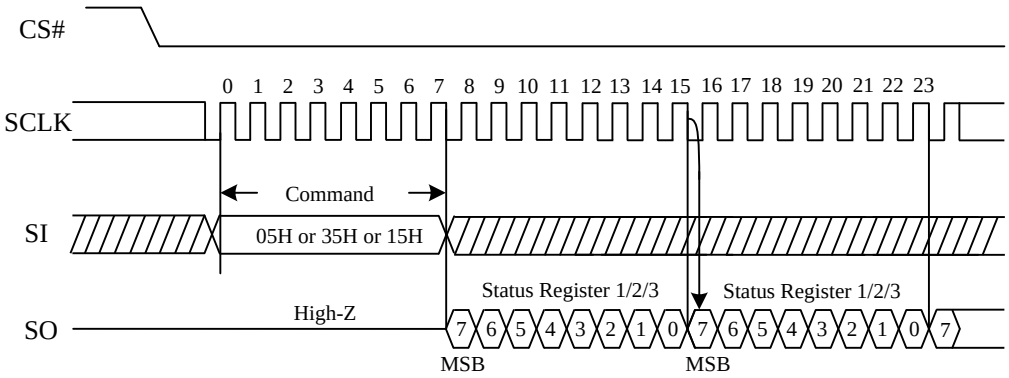

6.1.2. Write Status Register (01H or 31H or 11H)

The Write Status Register (WRSR) command allows new values to be written to the Status Register. Before it can be accepted, a Write Enable (WREN) command must previously have been executed. After the Write Enable (WREN) command has been decoded and executed, the device sets the Write Enable Latch (WEL).

The Write Status Register (WRSR) command has no effect on the volatile bits of the Status Register. CS# must be driven high after the eighth or sixteenth bit of the data byte has been latched in. If not, the Write Status Register (WRSR) command is not executed. As soon as CS# is driven high, the self-timed Write Status Register cycle (whose duration is tW) is initiated. While the Write Status Register cycle is in progress, the Status Register may still be read to check the value of the Write In Progress (WIP) bit. The Write In Progress (WIP) bit is 1 during the self-timed Write Status Register cycle, and is 0 when it is completed. When the cycle is completed, the Write Enable Latch (WEL) is reset.

The Write Status Register (WRSR) command allows the user to change the values of the Block Protect (BP4, BP3, BP2, BP1, BP0) bits, to define the size of the area that is to be treated as read-only, as defined in Table 1 & 2. The Write Status Register (WRSR) command also allows the user to set or reset the Status Register Protect (SRP) bit in accordance with the Write Protect (WP#) signal. The Status Register Protect (SRP) bit and Write Protect (WP#) signal allow the device to be put in the Hardware Protected Mode. The Write Status Register (WRSR) command is not executed once the Hardware Protected Mode is entered. For command code “01H”, the SI will input Status Register bits S7~S0, S15~S8. For the command code “31H”, the SI will input Status Register bits S15~S8. For the command code “11H”, the SI will input Status Register bits S23~S16.

Figure 2. Write Status Register Sequence Diagram

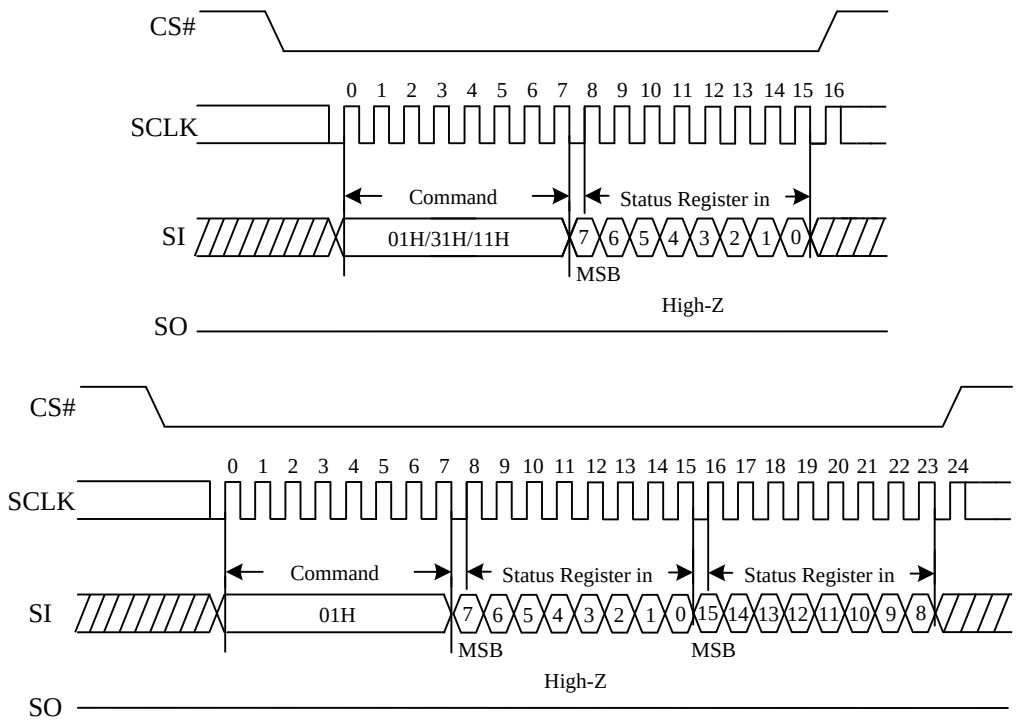

6.1.3. Read Manufacture ID/ Device ID (90H)

The Read Manufacturer/Device ID command is an alternative to the Release from Deep Power-Down and Read Device ID command that provides both the JEDEC assigned Manufacturer ID and the specific Device ID.

The command is initiated by driving the CS# pin low and shifting the command code “90H” followed by a 24-bit address (A23-A0) of 000000H. After which, the Manufacturer ID and the Device ID are shifted out on the falling edge of SCLK with most significant bit (MSB) first is shown in the figure below. If the 24-bit address is initially set to 000001H, the Device ID will be read first.

Figure 3. Read Manufacture ID/ Device ID Sequence Diagram

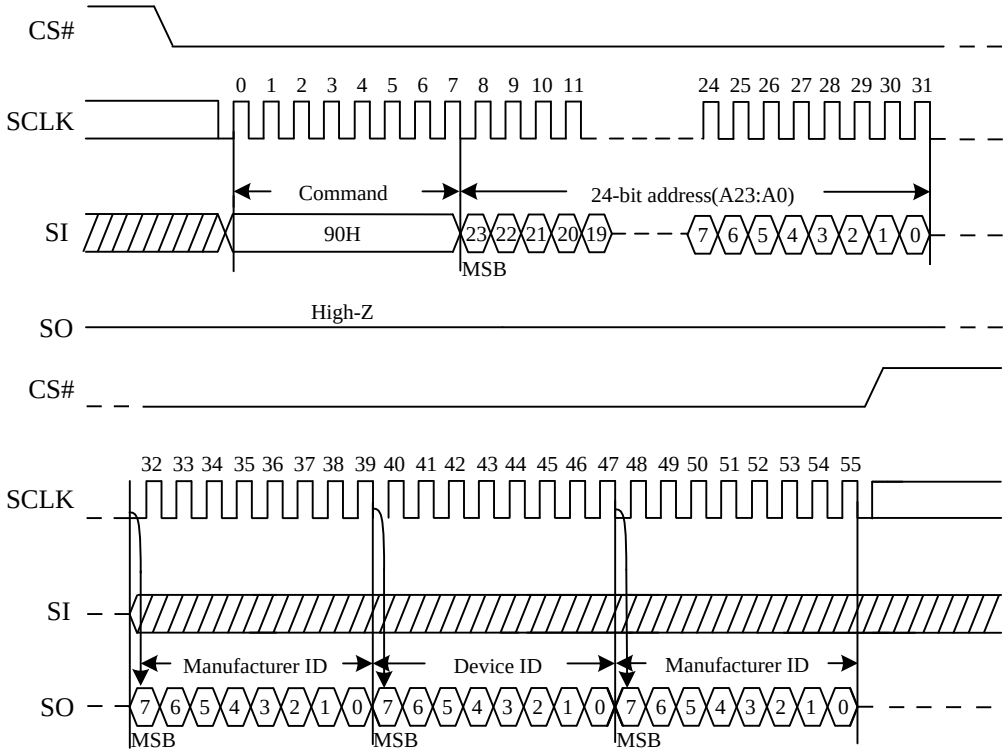

6.1.4. Read SFDP (5AH)

The Serial Flash Discoverable Parameter (SFDP) standard provides a consistent method of describing the functional and feature capabilities of serial flash devices in a standard set of internal parameter tables. These parameter tables can be interrogated by host system software to enable adjustments needed to accommodate divergent features from multiple vendors. The concept is similar to the one found in the Introduction of JEDEC Standard, JESD68 on CFI. SFDP is a standard of JEDEC Standard No.216.

Note: For SFDP Table, please contact XTX.

Figure 4. Read Serial Flash Discoverable Parameter command Sequence Diagram

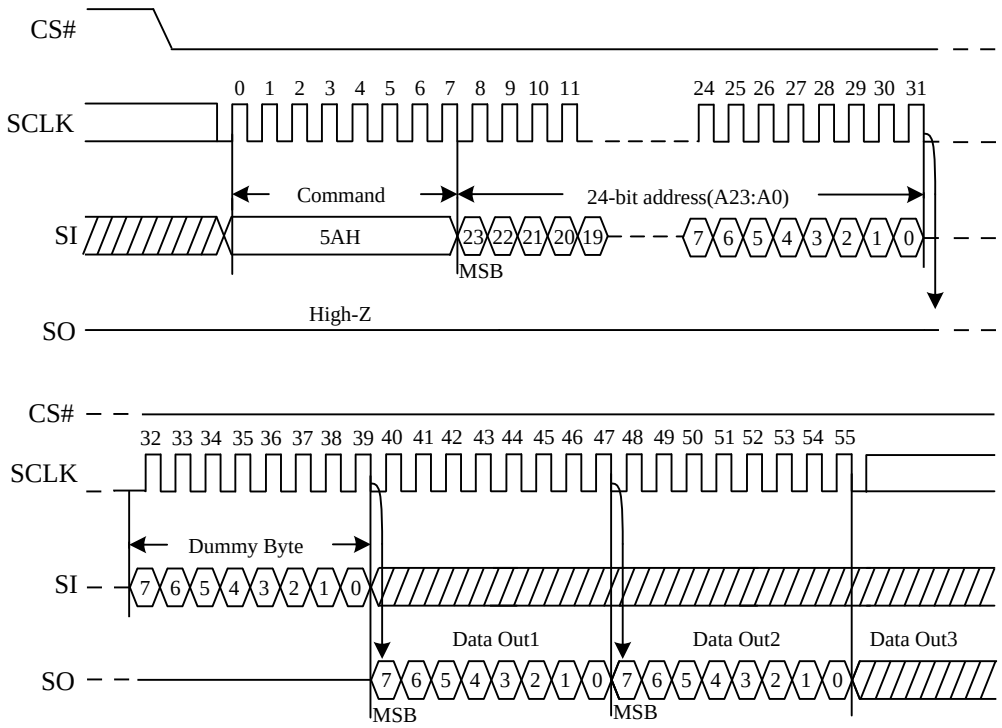

Note:

1. A23-A8 = 0, A7-A0 is the starting byte address for 256-byte SFDP Register.

6.1.5. Read Unique ID (4BH)

The Read Unique ID command accesses a factory-set read-only 128bit number that is unique to each device. The Unique ID can be used in conjunction with user software methods to help prevent copying or cloning of a system.

The Read Unique ID command sequence: CS# goes low → Sending Read Unique ID command → 4 dummy bytes → 128bit Unique ID Out → CS# goes high.

The command sequence is shown below.

Figure 5. Read Unique ID (RUID) Sequence

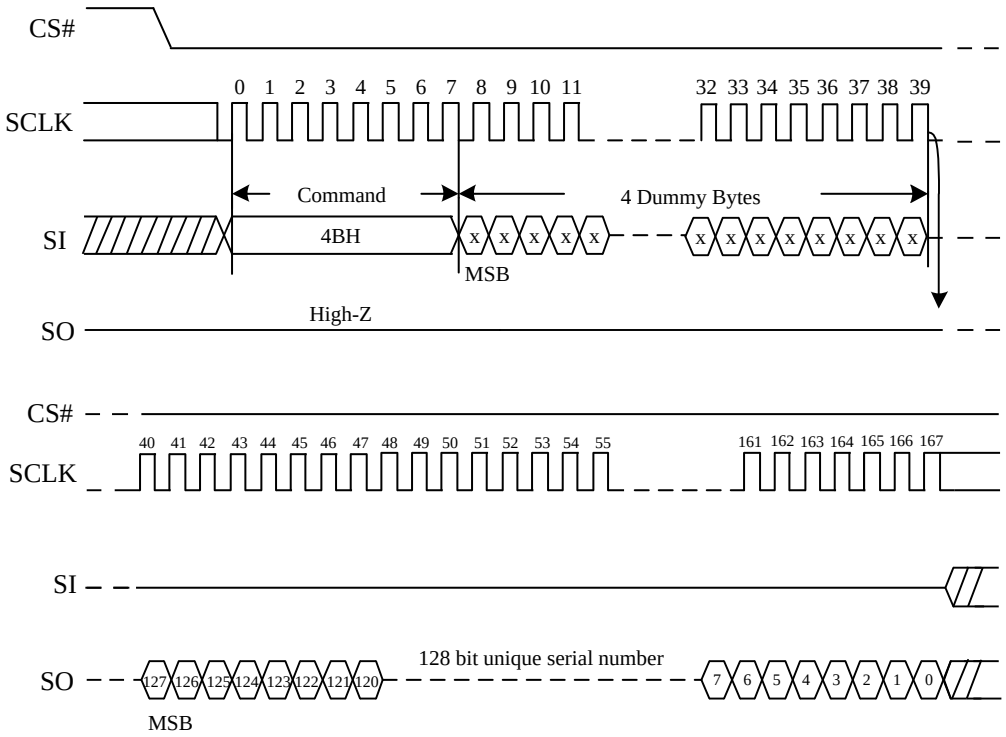

6.1.6. Read Identification (9FH)

The Read Identification (RDID) command allows the 8-bit manufacturer identification to be read, followed by two bytes of device identification. The device identification indicates the memory type in the first byte, and the memory capacity of the device in the second byte. Any Read Identification (RDID) command while an Erase or Program cycle is in progress will not be decoded, and has no effect on the cycle that is in progress. The Read Identification (RDID) command should not be issued while the device is in Deep Power-Down Mode.

The device is first selected by driving CS# low. Then, the 8-bit command code for the command is shifted in. This is followed by the 24-bit manufacture identification and device identification, stored in the memory, being shifted out on Serial Data Output, each bit being shifted out during the falling edge of Serial Clock. The command sequence is shown in the figure below. The Read Identification (RDID) command is terminated by driving CS# to high at any time during data output. When CS# is driven high, the device is put in the Standby Mode. Once in the Standby Mode, the device waits to be selected, so that it can receive, decode and execute commands.

Figure 6. Read Identification ID Sequence Diagram

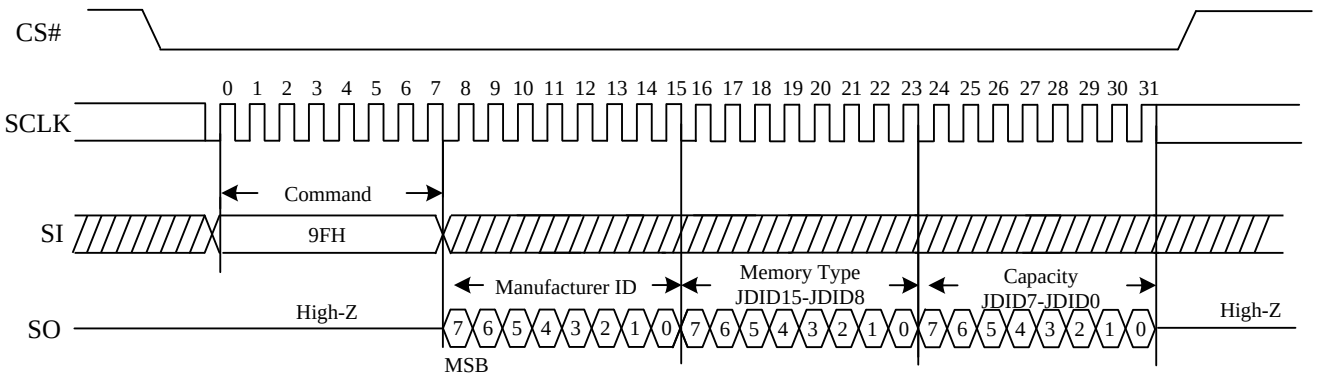

6.2. Array Access

6.2.1. Normal Read (03H)

The Read Data Bytes (READ) command is followed by a 3-byte address (A23-A0), each bit being latched-in during the rising edge of SCLK. Then the memory content, at that address, is shifted out on SO, each bit being shifted out, at a Max frequency fR, during the falling edge of SCLK. The first byte addressed can be at any location. The address is automatically incremented to the next address after each byte of data is shifted out. The whole memory can, therefore, be read with a single Read Data Bytes (READ) command. Any Read Data Bytes (READ) command, while an Erase, Program or Write cycle is in progress, is rejected without having any effects on the cycle that is in progress.

Figure 7. Read Data Bytes Sequence Diagram

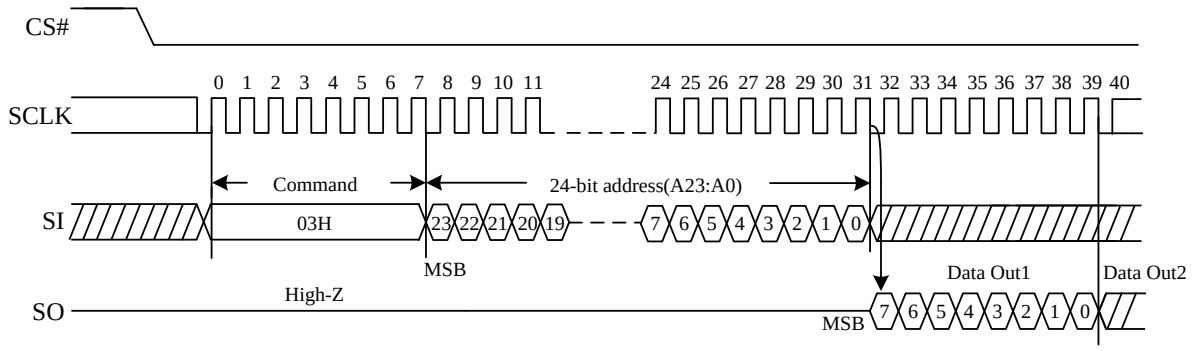

6.2.2. Fast Read (0BH)

The Read Data Bytes at Higher Speed (Fast Read) command is for quickly reading data out. It is followed by a 3-byte address (A23-A0) and a dummy byte, each bit being latched-in during the rising edge of SCLK. Then the memory content, at that address, is shifted out on SO, each bit being shifted out, at a Max frequency fC, during the falling edge of SCLK. The first byte addressed can be at any location. The address is automatically incremented to the next address after each byte of data is shifted out.

Figure 8. Read Data By test Higher Speed Sequence Diagram

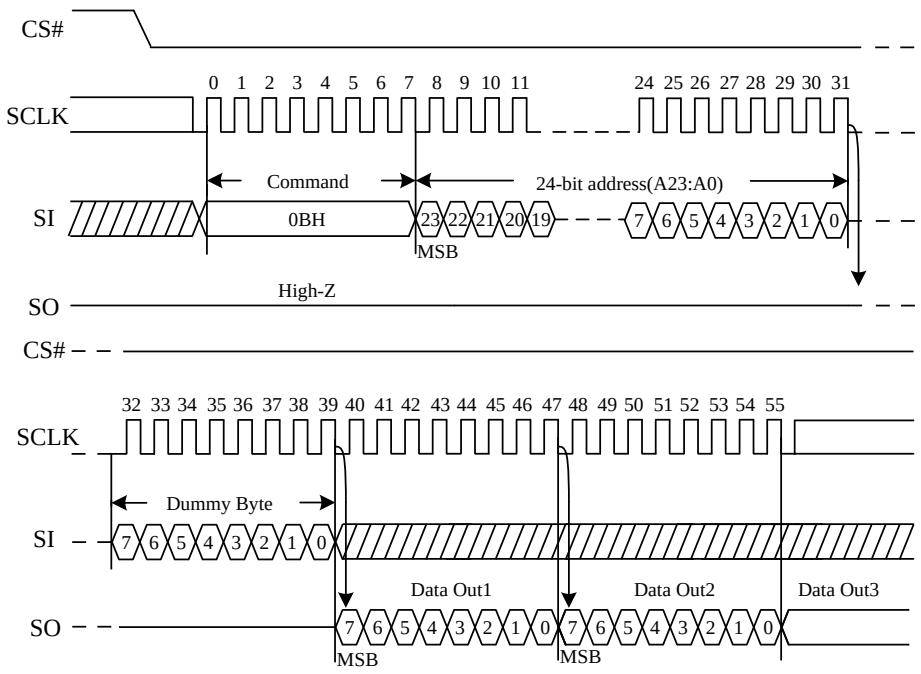

6.2.3. Dual Output Fast Read (3BH)

The Dual Output Fast Read command is followed by 3-byte address (A23-A0) and a dummy byte, each bit being latched in during the rising edge of SCLK, then the memory contents are shifted out 2-bit per clock cycle from SI and SO. The command sequence is shown in the following figure. The first byte addressed can be at any location. The address is automatically incremented to the next address after each byte of data is shifted out.

Figure 9. Dual Output Fast Read Sequence Diagram

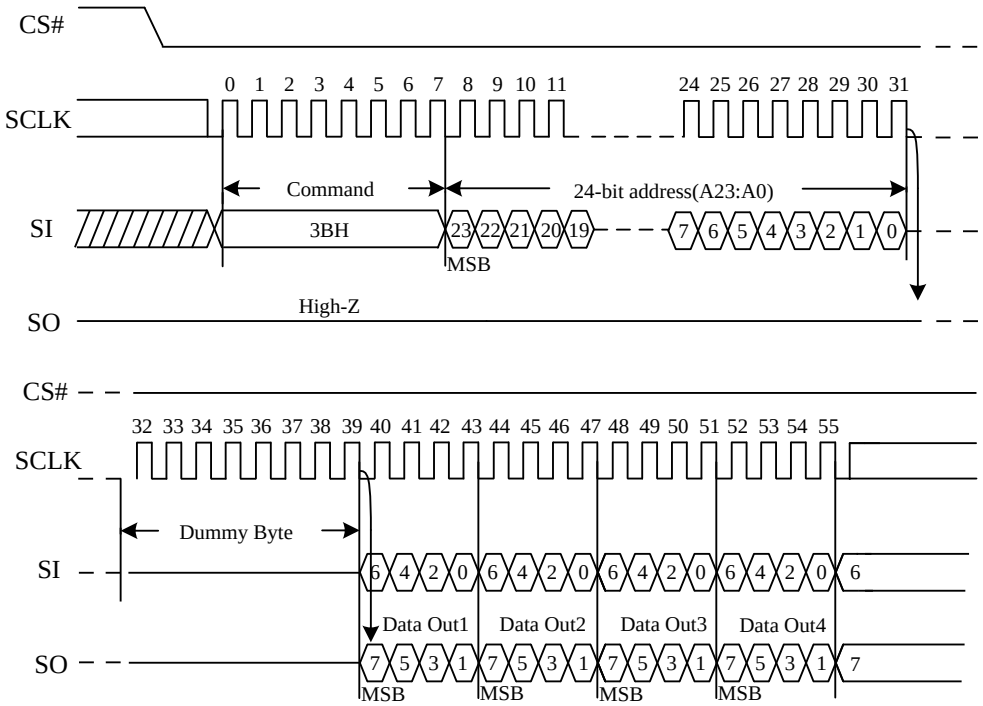

6.2.4. Dual I/O Fast Read (BBH)

The Dual I/O Fast Read command is similar to the Dual Output Fast Read command but with the capability to input the 3-byte address (A23-0) and a “Continuous Read Mode” byte 2-bit per clock by SI and SO, each bit being latched in during the rising edge of SCLK, then the memory contents are shifted out 2-bit per clock cycle from SI and SO. The command sequence is shown in the following figure. The first byte addressed can be at any location. The address is automatically incremented to the next address after each byte of data is shifted out.

The number of Dummy clocks for “Dual I/O Fast Read” (BBH) can be configured by DC bit in Status Register to 4 or 8. The “Continuous Read Mode” bits M7-M0 are considered as dummy clocks.

Figure 10. Dual I/O Fast Read Sequence Diagram (M5-4≠(1,0))

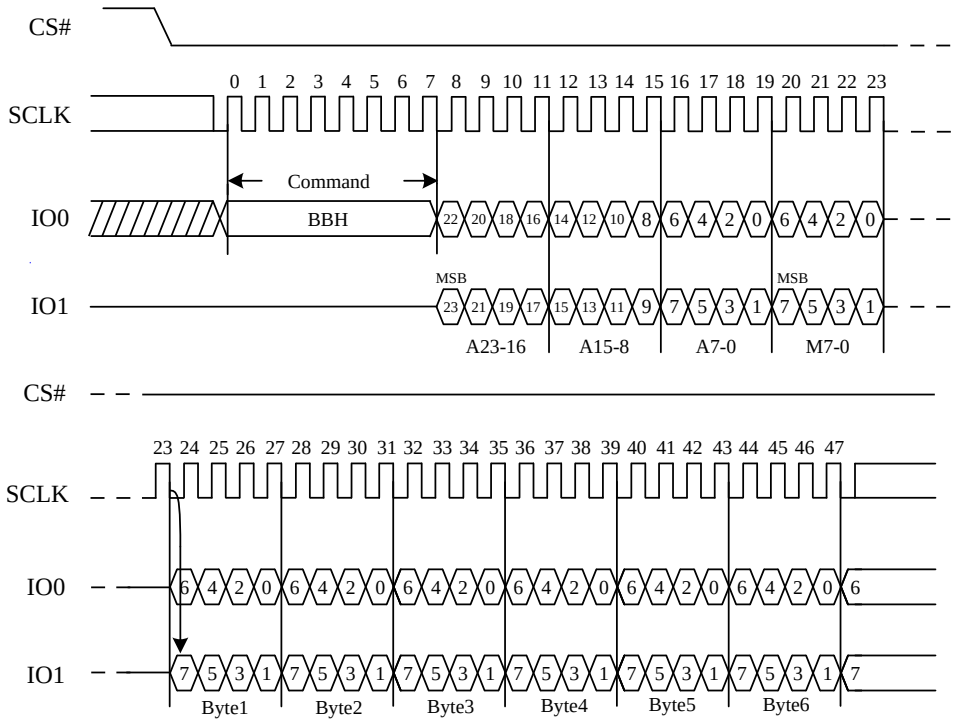

Dual I/O Fast Read with "Continuous Read Mode"

The Dual I/O Fast Read command can further reduce command overhead through setting the "Continuous Read Mode" bits (M7-0) after the input 3-byte address (A23-A0). If the "Continuous Read Mode" bits (M5-4) = (1, 0), then the next Dual I/O Fast Read command (after CS# is raised and then lowered) does not require the BBH command code. The command sequence is shown in figure below. If the "Continuous Read Mode" bits (M5-4) do not equal (1, 0), the next command requires the first BBH command code, thus returning to normal operation. A "Continuous Read Mode" Reset command can be used to reset (M5-4) before issuing normal command.

Figure 11. Dual I/O Fast Read Sequence Diagram (M5-4=(1,0))

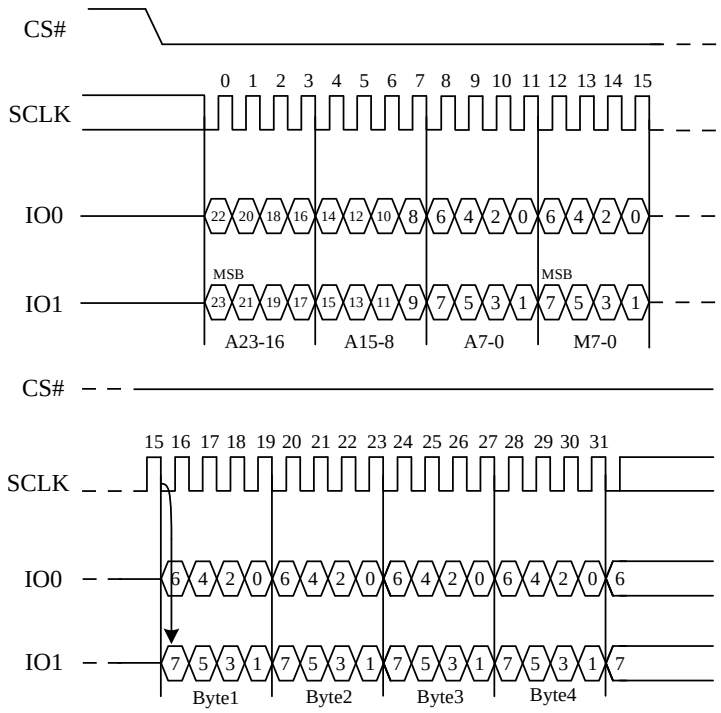

6.2.5. Quad Output Fast Read (6BH)

The Quad Output Fast Read command is followed by 3-byte address (A23-A0) and a dummy byte, each bit being latched in during the rising edge of SCLK, then the memory contents are shifted out 4-bit per clock cycle from IO3, IO2, IO1 and IO0. The command sequence is shown in the figure below. The first byte addressed can be at any location. The address is automatically incremented to the next address after each byte of data is shifted out.

Figure 12. Quad Output Fast Read Sequence Diagram

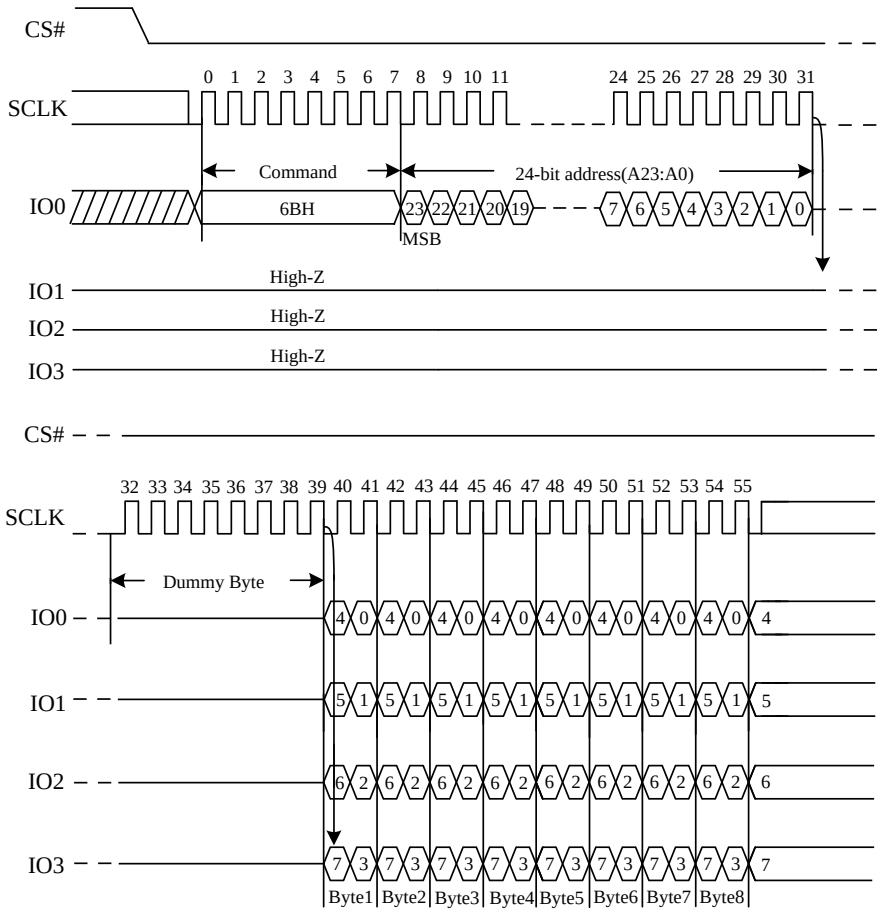

6.2.6. Quad I/O Fast Read (EBH)

The Quad I/O Fast Read command is similar to the Dual I/O Fast Read command but with the capability to input the 3-byte address (A23-0) and a “Continuous Read Mode” byte and Dummy clocks 4-bit per clock by IO0, IO1, IO3, IO4, each bit being latched in during the rising edge of SCLK, then the memory contents are shifted out 4-bit per clock cycle from IO0, IO1, IO2, IO3. The command sequence is shown in the figure below. The first byte addressed can be at any location. The address is automatically incremented to the next address after each byte of data is shifted out. The Quad Enable bit (QE) of Status Register (S9) must be set to 1 to enable for the Quad I/O Fast read command.

The number of Dummy clocks for “Quad I/O Fast Read” (EBH) can be configured by DC bit in Status Register to 6 or 10. The “Continuous Read Mode” bits M7-M0 are considered as Dummy clocks.

Figure 13. Quad I/O Fast Read Sequence Diagram (M5-4≠(1,0))

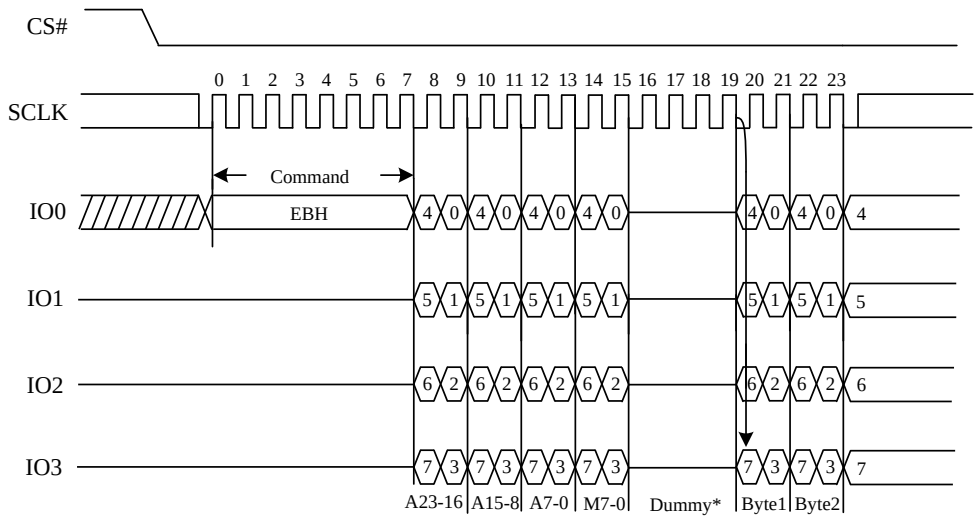

*The number of Dummy clocks can be set by DC bit

Quad I/O Fast Read with "Continuous Read Mode"

The Quad I/O Fast Read command can further reduce command overhead through setting the "Continuous Read Mode" bits (M7-0) after the input 3-byte address (A23-A0). If the "Continuous Read Mode" bits (M5-4) = (1, 0), then the next Quad I/O Fast Read command (after CS# is raised and then lowered) does not require the EBH command code. The command sequence is shown in Figure 14. If the "Continuous Read Mode" (M5-4) do not equal (1, 0), the next command requires the first EBH command code, thus returning to normal operation. A "Continuous Read Mode" Reset command can be used to reset (M5-4) before issuing normal command.

Figure 14. Quad I/O Fast Read Sequence Diagram (M5-4=(1,0))

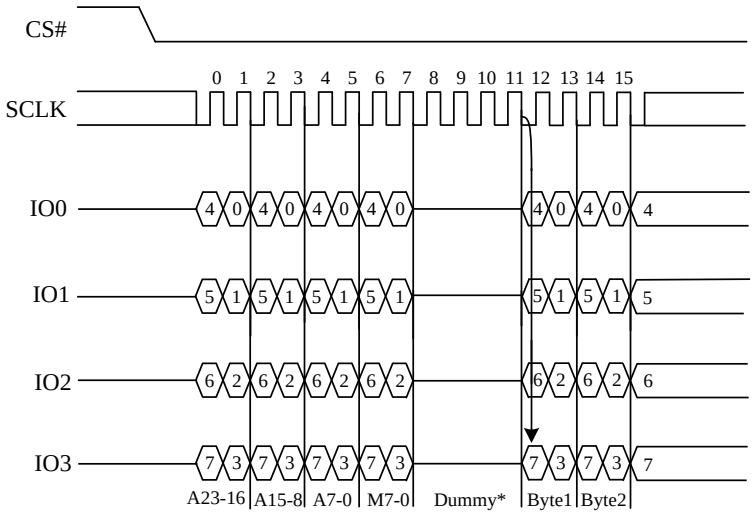

*The number of Dummy clocks can be set by DC bit

Quad I/O Fast Read with "8/16/32/64-Byte Wrap Around" in Standard SPI mode

The Quad I/O Fast Read command can be used to access a specific portion within a page by issuing "Set Burst with Wrap" (77H) commands prior to EBH. The "Set Burst with Wrap" (77H) command can either enable or disable the "Wrap Around" feature for the following EBH commands. When "Wrap Around" is enabled, the data being accessed can be limited to either an 8/16/32/64-byte section of a 256-byte page. The output data starts at the initial address specified in the command, once it reaches the ending boundary of the 8/16/32/64-byte section, the output will wrap around the beginning boundary automatically until CS# is pulled high to terminate the command.

The Burst with Wrap feature allows applications that use cache to quickly fetch a critical address and then fill the cache afterwards within a fixed length (8/16/32/64-byte) of data without issuing multiple read commands.

6.2.7. Page Program (02H)

The Page Program (PP) command is for programming the memory. A Write Enable (WREN) command must previously have been executed to set the Write Enable Latch (WEL) bit before sending the Page Program command.

The Page Program (PP) command is entered by driving CS# Low, followed by the command code, three address bytes and at least one data byte on SI. If the 8 least significant address bits (A7-A0) are not all zero, all transmitted data that goes beyond the end of the current page are programmed from the start address of the same page (from the address whose 8 least significant bits (A7-A0) are all zero). CS# must be driven low for the entire duration of the sequence. The Page Program command sequence: CS# goes low →Sending Page Program command→ 3-byte address on SI → at least 1 byte data on SI →CS# goes high. The command sequence is shown in the figure below. If more than 256 bytes are sent to the device, previously latched data are discarded and the last 256 data bytes are guaranteed to be programmed correctly within the same page. If less than 256 data bytes are sent to device, they are correctly programmed at the requested addresses without having any effects on the other bytes of the same page. CS# must be driven high after the eighth bit of the last data byte has been latched in; otherwise the Page Program (PP) command is not executed.

As soon as CS# is driven high, the self-timed Page Program cycle (whose duration is tPP) is initiated. While the Page Program cycle is in progress, the Status Register may be read to check the value of the Write In Progress (WIP) bit. The Write In Progress (WIP) bit is 1 during the self-timed Page Program cycle, and is 0 when it is completed. At some unspecified time before the cycle is completed, the Write Enable Latch (WEL) bit is reset.

A Page Program (PP) command applied to a page which is protected by the Block Protect (BP4, BP3, BP2, BP1, BP0) is not executed.

Figure 15. Page Program Sequence Diagram

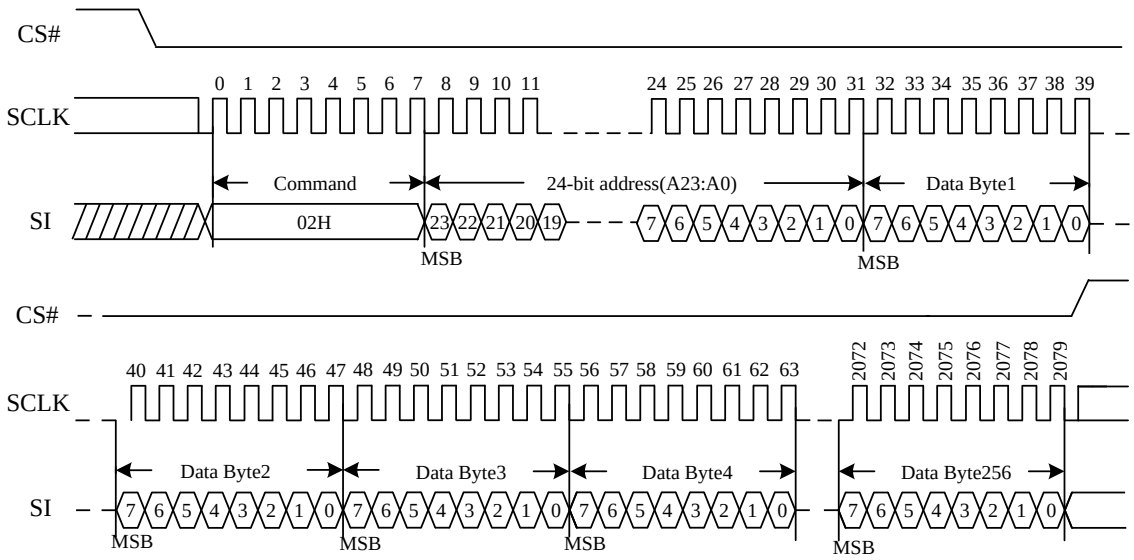

6.2.8. Quad Page Program (32H)

The Quad Page Program command is for programming the memory using four pins: IO0, IO1, IO2, and IO3. To use Quad Page Program, the Quad Enable bit in status register bit 9 must be set (QE=1). A Write Enable (WREN) command must previously have been executed to set the Write Enable Latch (WEL) bit before sending the Quad Page Program command. The Quad Page Program command is entered by driving CS# Low, followed by the command code (32H), three address bytes and at least one data byte on IO pins.

The command sequence is shown in the figure below. If the 8 least significant address bits (A7-A0) are not all zero, all transmitted data that goes beyond the end of the current page are programmed from the start address of the same page (from the address whose 8 least significant bits (A7-A0) are all zero). If more than 256 bytes are sent to the device, previously latched data are discarded and the last 256 data bytes are guaranteed to be programmed correctly within the same page. If less than 256 data bytes are sent to device, they are correctly programmed at the requested addresses without having any effects on the other bytes of the same page. CS# must be driven high after the eighth bit of the last data byte has been latched in; otherwise the Quad Page Program command will not be executed.

As soon as CS# is driven high, the self-timed Quad Page Program cycle (whose duration is tPP) is initiated. While the Quad Page Program cycle is in progress, the Status Register can be read to check the value of the Write In Progress (WIP) bit. The Write In Progress (WIP) bit is 1 during the self-timed Quad Page Program cycle, and is 0 when it is completed. At some unspecified time before the cycle is completed, the Write Enable Latch (WEL) bit is reset.

A Quad Page Program command applied to a page which is protected by the Block Protect (BP4, BP3, BP2, BP1, BP0) will not be executed.

Figure 16. Quad Page Program Sequence Diagram

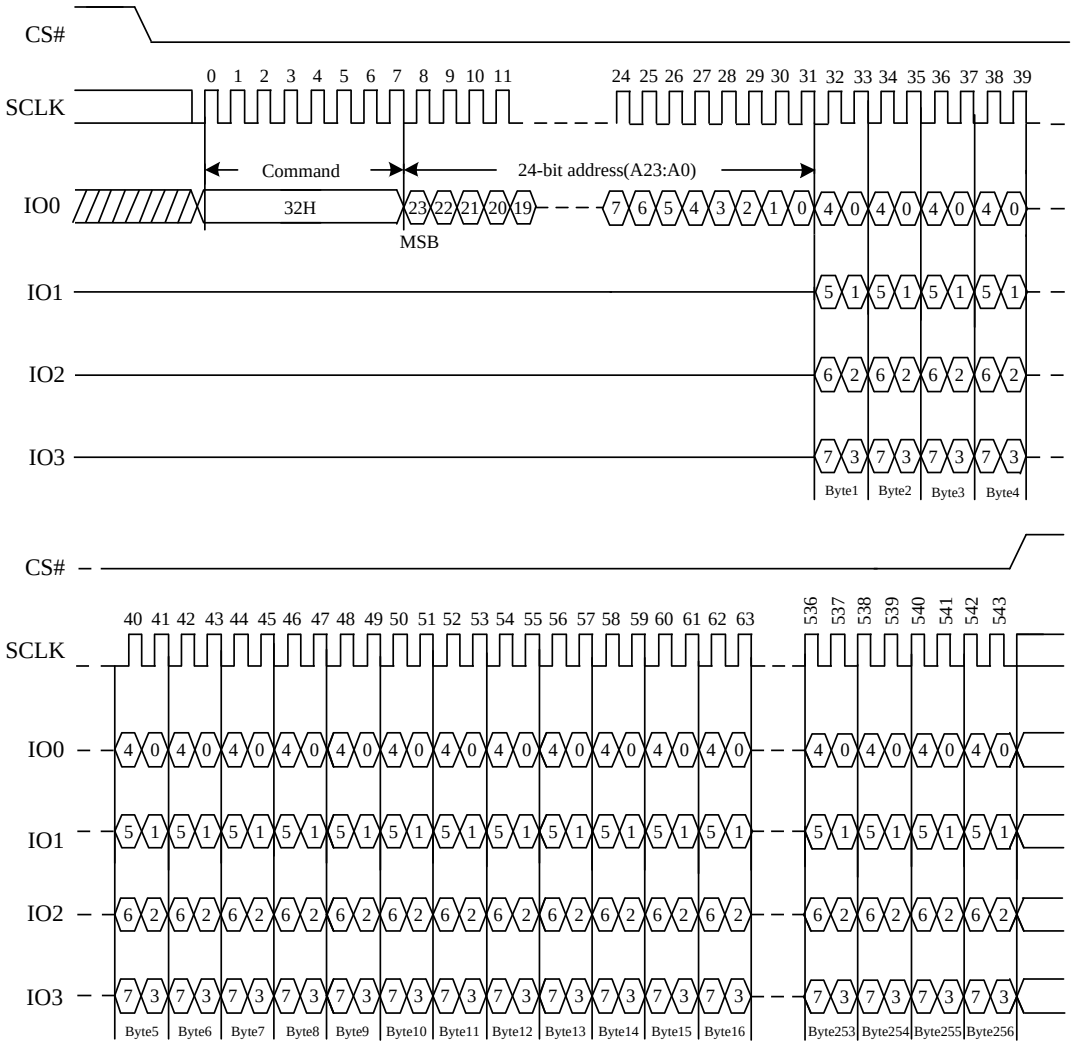

6.2.9. Sector Erase (20H)

The Sector Erase (SE) command is for erasing all the data of the chosen sector. A Write Enable (WREN) command must previously have been executed to set the Write Enable Latch (WEL) bit before sending the Sector Erase command. The Sector Erase (SE) command is entered by driving CS# low, followed by the command code, and 3-address byte on SI. Any address inside the sector is a valid address for the Sector Erase (SE) command.

The Sector Erase command sequence: CS# goes low→ Sending Sector Erase command→ 3-byte address on SI → CS# goes high. The command sequence is shown in the figure below. CS# must be driven high after the eighth bit of the last address byte has been latched in; otherwise the Sector Erase (SE) command will not be executed. As soon as CS# is driven high, the self-timed Sector Erase cycle (whose duration is tSE) is initiated. While the Sector Erase cycle is in progress, the Status Register can be read to check the value of the Write In Progress (WIP) bit. The Write In Progress (WIP) bit is 1 during the self-timed Sector Erase cycle, and is 0 when it is completed. At some unspecified time before the cycle is completed, the Write Enable Latch (WEL) bit is reset. A Sector Erase (SE) command applied to a sector which is protected by the Block Protect (BP4, BP3, BP2, BP1, BP0) bit (see Table 1 & 2) will not be executed.

Note: Power disruption during erase operation will cause incomplete erase, thus it is recommended to perform a re-erase once power resume.

Figure 17. Sector Erase Sequence Diagram

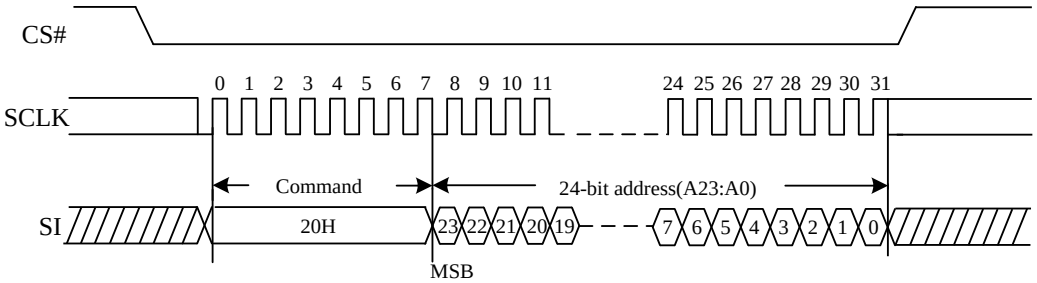

6.2.10. 32KB Block Erase (52H)

The 32KB Block Erase (BE) command is for erasing all the data of the chosen block. A Write Enable (WREN) command must previously have been executed to set the Write Enable Latch (WEL) bit before sending the 32KB Block Erase command. The 32KB Block Erase (BE) command is entered by driving CS# low, followed by the command code, and three address bytes on SI, driving CS# high. Any address inside the block is a valid address for the 32KB Block Erase (BE) command.

The 32KB Block Erase command sequence: CS# goes low→ Sending 32KB Block Erase command→ 3-byte address on SI→CS# goes high. The command sequence is shown in the figure below. CS# must be driven high after the eighth bit of the last address byte has been latched in; otherwise the 32KB Block Erase (BE) command will not be executed. As soon as CS# is driven high, the self-timed Block Erase cycle (whose duration is tBE) is initiated. While the Block Erase cycle is in progress, the Status Register can be read to check the value of the Write In Progress (WIP) bit. The Write In Progress (WIP) bit is 1 during the self-timed Block Erase cycle, and is 0 when it is completed. At some unspecified time before the cycle is completed, the Write Enable Latch (WEL) bit is reset. A 32KB Block Erase (BE) command applied to a block which is protected by the Block Protect (BP4, BP3, BP2, BP1, BP0) bits (see Table 1 & 2) will not be executed.

Note: Power disruption during the erase operation will cause incomplete erase, thus it is recommended to perform a re-erase once power resume.

Figure 18. 32KB Block Erase Sequence Diagram

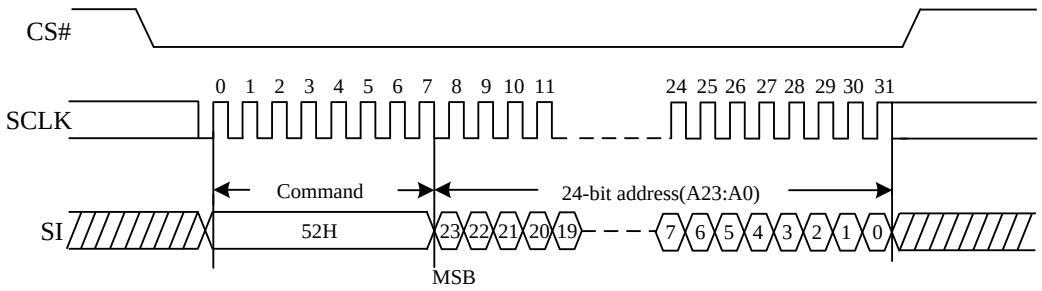

6.2.11. 64KB Block Erase (D8H)

The 64KB Block Erase (BE) command is for erasing all the data of the chosen block. A Write Enable (WREN) command must previously have been executed to set the Write Enable Latch (WEL) bit, before sending the 64KB Block Erase command. The 64KB Block Erase (BE) command is entered by driving CS# low, followed by the command code, and three address bytes on SI, driving CS# high. Any address inside the block is a valid address for the 64KB Block Erase (BE) command.

The 64KB Block Erase command sequence: CS# goes low →Sending 64KB Block Erase command→ 3-byte address on SI→CS# goes high. The command sequence is shown in the figure below. CS# must be driven high after the eighth bit of the last address byte has been latched in; otherwise the 64KB Block Erase (BE) command will not be executed. As soon as CS# is driven high, the self-timed Block Erase cycle (whose duration is tBE) is initiated. While the Block Erase cycle is in progress, the Status Register can be read to check the value of the Write In Progress (WIP) bit. The Write In Progress (WIP) bit is 1 during the self-timed Block Erase cycle, and is 0 when it is completed. At some unspecified time before the cycle is completed, the Write Enable Latch (WEL) bit is reset. A 64KB Block Erase (BE) command applied to a block which is protected by the Block Protect (BP4, BP3, BP2, BP1, BP0) bits (see Table 1 & 2) will not be executed.

Note: Power disruption during the erase operation will cause incomplete erase, thus it is recommended to perform a re-erase once power resume.

Figure 19. 64KB Block Erase Sequence Diagram

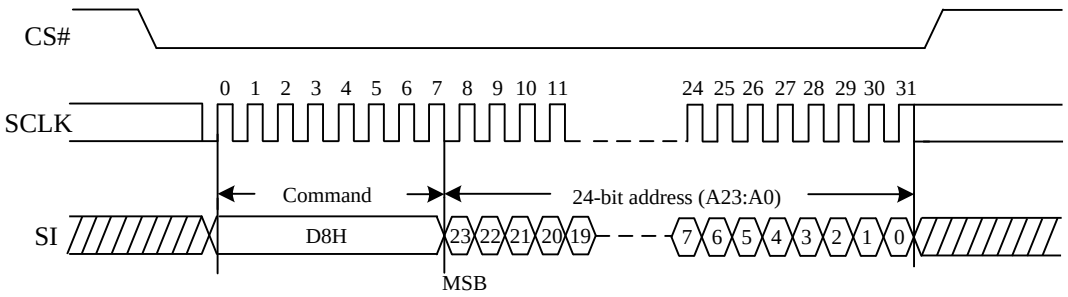

6.2.12. Chip Erase (60H or C7H)

The Chip Erase (CE) command is for erasing all the data of the chip. A Write Enable (WREN) command must previously have been executed to set the Write Enable Latch (WEL) bit, before sending the Chip Erase command .The Chip Erase (CE) command is entered by driving CS# Low, followed by the command code on SI.

The Chip Erase command sequence: CS# goes low→ Sending Chip Erase command→CS# goes high. The command sequence is shown in the figure below. CS# must be driven high after the eighth bit of the command code has been latch in, otherwise the Chip Erase command will not be executed. As soon as CS# is driven high, the self-timed Chip Erase cycle (whose duration is tCE) is initiated. While the Chip Erase cycle is in progress, the Status Register can be read to check the value of the Write In Progress (WIP) bit. The Write In Progress (WIP) bit is 1 during the self-timed Chip Erase cycle, and is 0 when it is completed. At some unspecified time before the cycle is completed, the Write Enable Latch (WEL) bit is reset. The Chip Erase (CE) command is ignored if one or more sectors are protected.

Note: Power disruption during the erase operation will cause incomplete erase, thus it is recommended to perform a re-erase once power resume.

Figure 20. Chip Erase Sequence Diagram

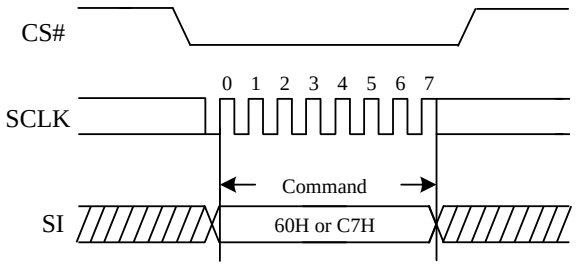

6.3. Device Operations

6.3.1. Enable Reset (66H) and Reset (99H)

If the Reset command is accepted, any on-going internal operation will be terminated and the device will return to its default power-on state and lose all the current volatile settings, such as Volatile Status Register bits, Write Enable Latch status (WEL), Read Parameter setting (P7-P0) and Wrap bit Setting (W6-W4).

The "Reset (99H)" command sequence as follow: CS# goes low → Sending Enable Reset command → CS# goes high → CS# goes low → Sending Reset command → CS# goes high. Once the Reset command is accepted by the device, the device will take approximately tRST_R to reset. During this period, no command will be accepted. Data corruption may happen if there is an on-going internal Erase or Program operation when Reset command sequence is accepted by the device. It is recommended to check the BUSY bit and the SUS bit in Status Register before issuing the Reset command sequence.

The Enable Reset (66H) command must be issued prior to a Reset(99H) command and any other commands can't be inserted between them. Otherwise, Enable Reset (66H) command will be cleared.

Figure 21. Enable Reset and Reset command Sequence Diagram

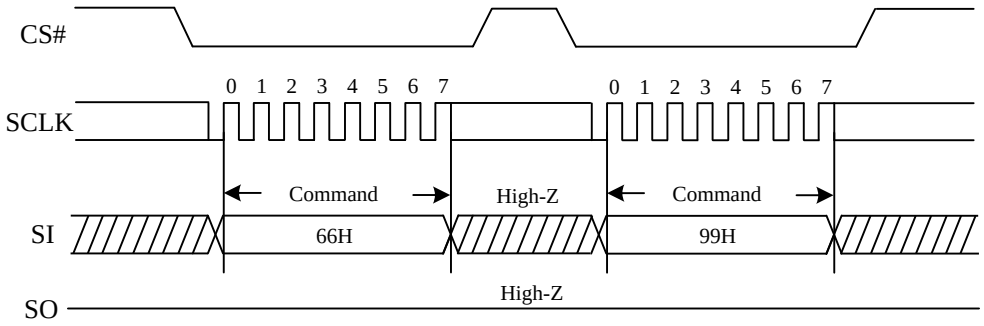

6.3.2. Write Enable (06H)

The Write Enable (WREN) command is for setting the Write Enable Latch (WEL) bit. The Write Enable Latch (WEL) bit must be set prior to every Page Program (PP), Sector Erase (SE), Block Erase (BE), Chip Erase (CE), Erase Security Register, Program Security Register and Write Status Register (WRSR) command. The Write Enable (WREN) command sequence: CS# goes low → Sending the Write Enable command → CS# goes high.

Figure 22. Write Enable Sequence Diagram

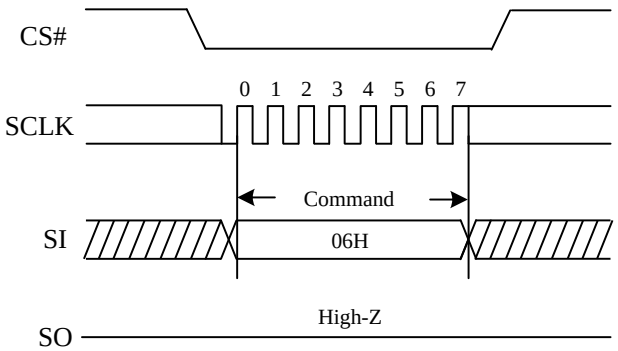

6.3.3. Write Enable for Volatile Status Register (50H)

The non-volatile Status Register bits can also be written to as volatile bits. This gives more flexibility to change the system configuration and memory protection schemes quickly without waiting for the typical non-volatile bit write cycles or affecting the endurance of the Status Register non-volatile bits. The Write Enable for Volatile Status Register command must be issued prior to a Write Status Register command and any other commands can't be inserted between them. Otherwise, Write Enable for Volatile Status Register will be cleared. The Write Enable for Volatile Status Register command will not set the Write Enable Latch bit, it is only valid for the Write Status Register command to change the volatile Status Register bit values.

Figure 23. Write Enable for Volatile Status Register Sequence Diagram

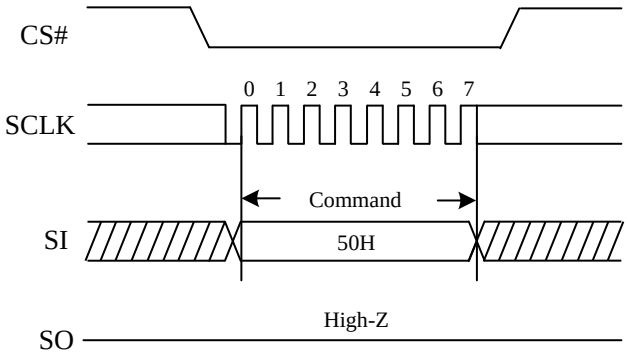

6.3.4. Write Disable (04H)

The Write Disable (WRDI) command is for resetting the Write Enable Latch (WEL) bit. The Write Disable command sequence: CS# goes low → Sending the Write Disable command → CS# goes high. The WEL bit is reset by following condition: Write Disable command; Power-up; upon completion of the Write Status Register, Page Program, Sector Erase, Block Erase and Chip Erase commands.

Figure 24. Write Disable Sequence Diagram

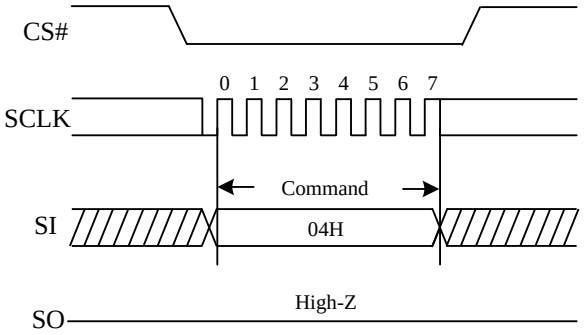

6.3.5. Program/Erase Suspend (75H)

The Program/Erase Suspend command (75H), allows the system to interrupt a Page Program or Sector/Block Erase operation and then read data from any other sector or block. The Write Status Register command (01H, 31H, 11H) and Erase/Program Security Registers command (44H, 42H) and Erase commands (20H, 52H, D8H, C7H, 60H) and Page Program command (02H, 32H) are not allowed during Program Suspend. The Write Status Register command (01H, 31H, 11H) and Erase Security Registers command (44H) and Erase commands (20H, 52H, D8H, C7H, 60H) are not allowed during Erase Suspend. Program/Erase Suspend is valid only during the Page Program or Sector/Block Erase operation. A maximum of time of "tSUS" (See AC Characteristics) is required to suspend the Program/Erase operation.

The Program/Erase Suspend command will be accepted by the device only if the SUS bit in the Status Register equals to 0 and WIP bit equals to 1 while a Page Program or a Sector or Block Erase operation is on-going. If the SUS bit equals to 1 or WIP bit equals to 0, the Suspend command will be ignored by the device. The WIP bit will be cleared from 1 to 0 within "tSUS" and the SUS bit will be set from 0 to 1 immediately after Program/Erase Suspend. A power-off during the suspend period will reset the device and release the suspend state. The command sequence is shown in the figure below.

Figure 25. Program/Erase Suspend Sequence Diagram

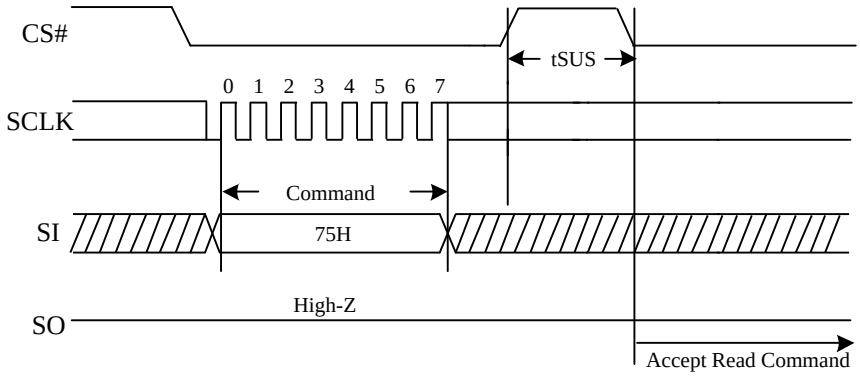

6.3.6. Program/Erase Resume (7AH)

The Program/Erase Resume command must be written to resume the Page Program or Sector/Block Erase operation after a Program/Erase Suspend command. The Program/Erase command will be accepted by the device only if the SUS bit equals to 1 and the WIP bit equals to 0. After issued the SUS bit in the status register will be cleared from 1 to 0 immediately, the WIP bit will be set from 0 to 1 within 200ns and the Sector/Block Erase operation or the Page Program operation will continue. The Program/Erase Resume command will be ignored unless a Program/Erase Suspend is active. The command sequence is shown in the figure below.

Figure 26. Program/Erase Resume Sequence Diagram

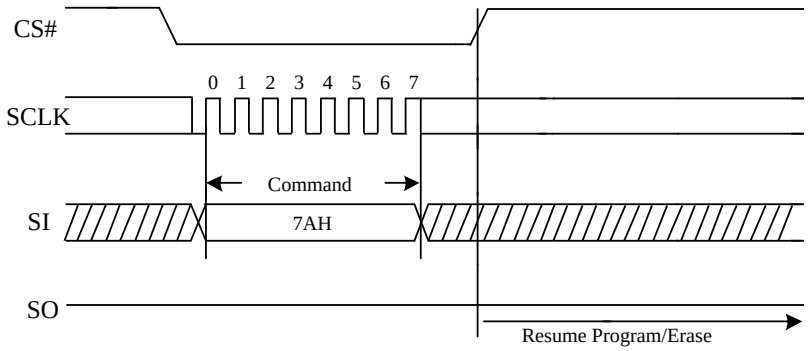

6.3.7. Set Burst With Wrap (77H)

The Set Burst with Wrap command is used in conjunction with "Quad I/O Fast Read (EBH)" command to access a fixed length of 8/16/32/64-byte section within a 256-byte page in standard SPI mode. The Set Burst with Wrap command sequence: CS# goes low →Send Set Burst with Wrap command →Send 24 dummy bits →Send 8 bits "Wrap bits"→CS# goes high

W6,W5	W4=0		W4=1(default)	
	Wrap Around	Wrap Length	Wrap Around	Wrap Length
0,0	Yes	8-byte	No	N/A
0,1	Yes	16-byte	No	N/A
1,0	Yes	32-byte	No	N/A
1,1	Yes	64-byte	No	N/A

If the W6-W4 bits are set by the Set Burst with Wrap command, all the following "Quad I/O Fast Read (EBH)" command will use the W6-W4 setting to access the 8/16/32/64-byte section within any page. To exit the "Wrap Around" function and return to normal read operation, another Set Burst with Wrap command should be issued to set W4=1.

Figure 27. Set Burst with Wrap Sequence Diagram

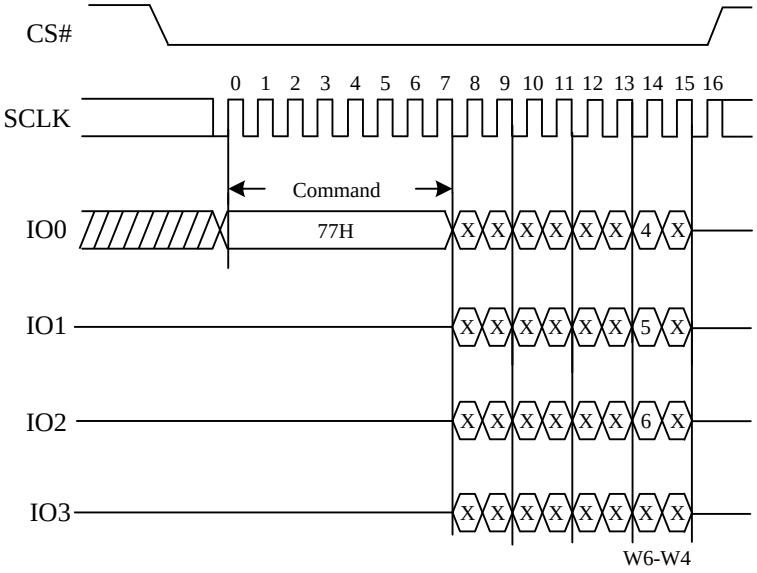

6.3.8. Deep Power-Down (B9H)

Executing the Deep Power-Down (DPD) command is the only way to put the device in the lowest power consumption mode (the Deep Power-Down Mode). It can also be used as an extra software protection mechanism, since in this mode, the device ignores all Write, Program and Erase commands. Driving CS# high deselects the device, and puts the device in the Standby Mode (if there is no internal cycle currently in progress). But the Standby Mode is different from the Deep Power-Down Mode. The Deep Power-Down Mode can only be entered by executing the Deep Power-Down (DPD) command. Once the flash memory has entered the Deep Power-Down Mode, all commands are ignored except the Release from Deep Power-Down and Read Device ID command (ABH) and Software Reset (66H+99H). This command releases the flash memory from the Deep Power-Down Mode.

The Deep Power-Down Mode automatically stops at Power-Off, and the device always Power-Up in the Standby Mode. The Deep Power-Down (DPD) command is entered by driving CS# low, followed by the command code on SI, driving CS# high.

The Deep Power-Down command sequence: CS# goes low → Sending Deep Power-Down command → CS# goes high. The command sequence is shown in the figure below. CS# must be driven high after the eighth bit of the command code has been latched in; otherwise the Deep Power-Down (DPD) command will not be executed. As soon as CS# is driven high, it requires a time duration of tDP before the supply current is reduced to ICC2 and the Deep Power-Down Mode is entered. Any input of Deep Power-Down (DPD) command, while an Erase, Program or Write cycle is in progress, is rejected without having any effects on the cycle that is in progress.

Figure 28. Deep Power-Down Sequence Diagram

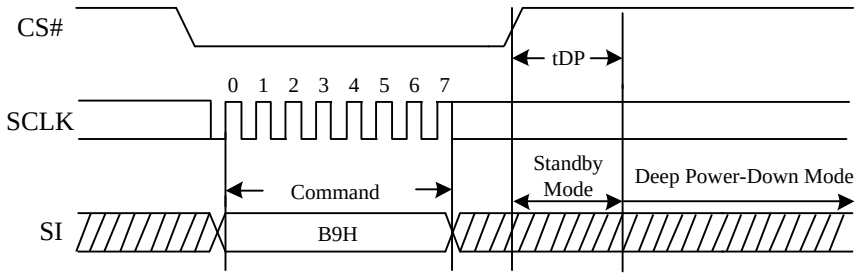

6.3.9. Release From Deep Power-Down (ABH)

The Release from Deep Power-Down and Read Device ID command is a multi-purpose command. It can be used to release the device from Deep Power-Down Mode or obtain the devices electronic identification (ID) number.

To release the device from Deep Power-Down Mode, the command is issued by driving the CS# pin low, shifting the instruction code (ABH) and driving CS# high as shown in Figure 62. Release from Deep Power-Down Mode will take the time duration of tRES1 (See AC Characteristics) before the device resume to normal state and other command are accepted. The CS# pin must remain high during the tRES1 time duration.

When the command is used only to obtain the Device ID while the flash memory is not in Deep Power-Down Mode, the command is initiated by driving the CS# pin low and shifting the instruction code (ABH) followed by 3 dummy bytes. The Device ID bits are then shifted out on the falling edge of SCLK with most significant bit (MSB) first as shown in Figure 64. The Device ID value is listed in Manufacturer and Device Identification table. The Device ID can be read continuously. The command is completed by driving CS# high.

When the command is used to release the device from Deep Power-Down Mode and obtain the Device ID, the command is the same as previously described, and shown in Figure 64, except that after CS# is driven high it must remain high for a time duration of tRES2 (See AC Characteristics). After this time duration the device will resume to normal mode and other command will be accepted. If the Release from Deep Power-Down and Read Device ID command is issued while an Erase, Program or Write cycle is in process (when WIP equals to 1) the command will be ignored and will not affect the current cycle.

Figure 29. Release Power-Down Sequence Diagram

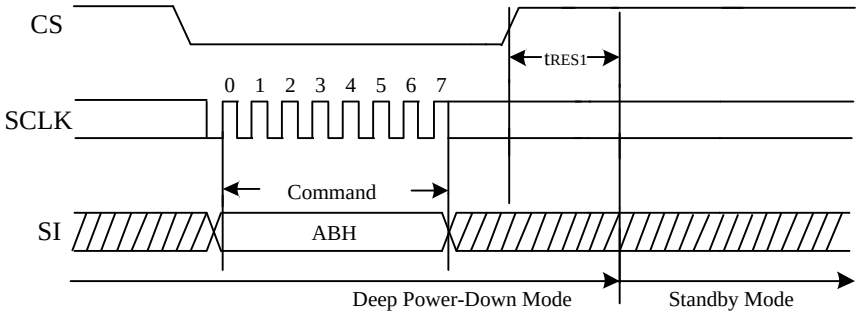

Figure 30. Release From Deep Power-Down/Read Device ID Sequence Diagram

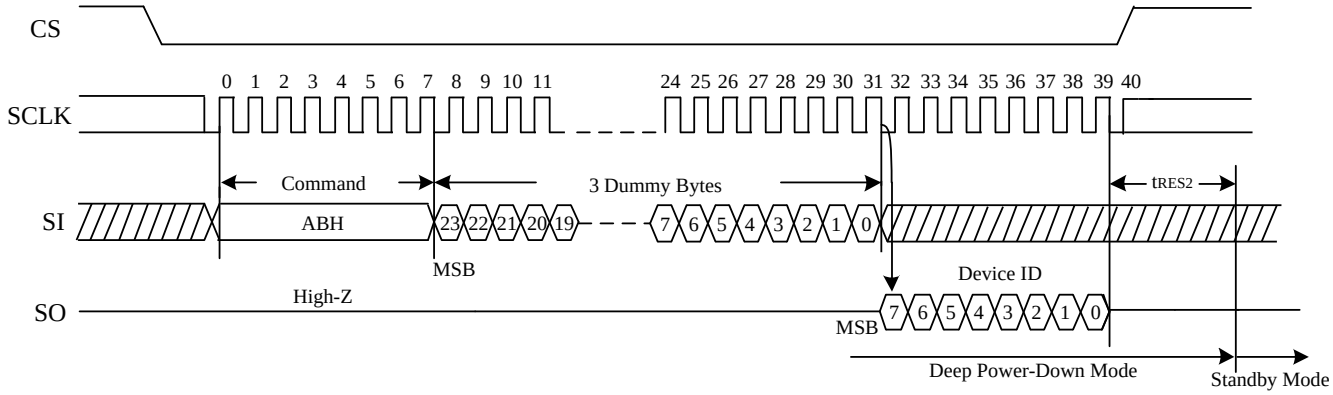

6.4. One-Time Programmable (OTP) Operations

6.4.1. Erase Security Register (44H)

The device provides 3x1024-byte Security Registers which can be erased per 1024-byte at a time. These registers may be used by the system manufacturers to store security and other important information separately from the main memory array.

The Erase Security Registers command is similar to Sector/Block Erase command. A Write Enable (WREN) command must previously have been executed to set the Write Enable Latch (WEL) bit.

The Erase Security Registers command sequence: CS# goes low → Sending Erase Security Registers Command → CS# goes high. The command sequence is shown in the figure below. CS# must be driven high after the eighth bit of the command code has been latched in, otherwise the Erase Security Registers command is not executed. As soon as CS# is driven high, the self-timed Erase Security Registers cycle (whose duration is tSE) is initiated. While the Erase Security Registers cycle is in progress, the Status Register may be read to check the value of the Write In Progress (WIP) bit. The Write In Progress (WIP) bit is 1 during the self-timed Erase Security Registers cycle, and is 0 when it is completed. At some unspecified time before the cycle is completed, the Write Enable Latch (WEL) bit is reset. The Security Registers Lock bit (LB1, LB2, LB3) in the Status Register can be used to OTP protect the security registers. Once the LB bit is set to 1, the corresponding Security Registers (#1, #2, #3) will be permanently locked; the Erase Security Registers command will be ignored.

Address	A23-A14	A13-A12	A11-A10	A9-A0
Security Registers #1	Don't Care	01b	Don't Care	Don't Care
Security Registers #2	Don't Care	10b	Don't Care	Don't Care
Security Registers #3	Don't Care	11b	Don't Care	Don't Care

Figure 31. Erase Security Registers Command Sequence Diagram

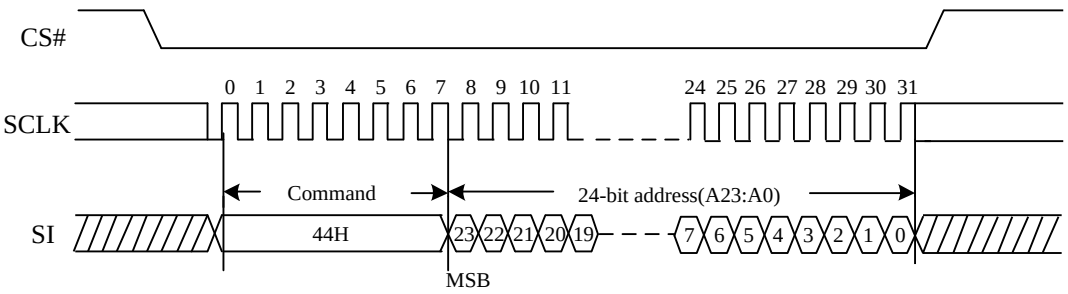

6.4.2. Program Security Register (42H)

The Program Security Registers command is similar to the Page Program command. It allows from 1 to 1024 bytes Security Registers data to be programmed. A Write Enable (WREN) command must previously have been executed to set the Write Enable Latch (WEL) bit before sending the Program Security Registers command. The Program Security Registers command is entered by driving CS# Low, followed by the command code (42H), three address bytes and at least one data byte on SI. As soon as CS# is driven high, the self-timed Program Security Registers cycle (whose duration is tPP) is initiated. While the Program Security Registers cycle is in progress, the Status Register may be read to check the value of the Write In Progress (WIP) bit. The Write In Progress (WIP) bit is 1 during the self-timed Program Security Registers cycle, and is 0 when it is completed. At some unspecified time before the cycle is completed, the Write Enable Latch (WEL) bit is reset.

If the Security Registers Lock bit (LB1, LB2, LB3) is set to 1, the corresponding Security Registers (#1, #2, #3) will be permanently locked. Program Security Registers command will be ignored.

Address	A23-A14	A13-A12	A11-A10	A9-A0
Security Registers #1	Don't Care	01b	Don't Care	Byte Address
Security Registers #2	Don't Care	10b	Don't Care	Byte Address
Security Registers #3	Don't Care	11b	Don't Care	Byte Address

Figure 32. Program Security Registers Command Sequence Diagram

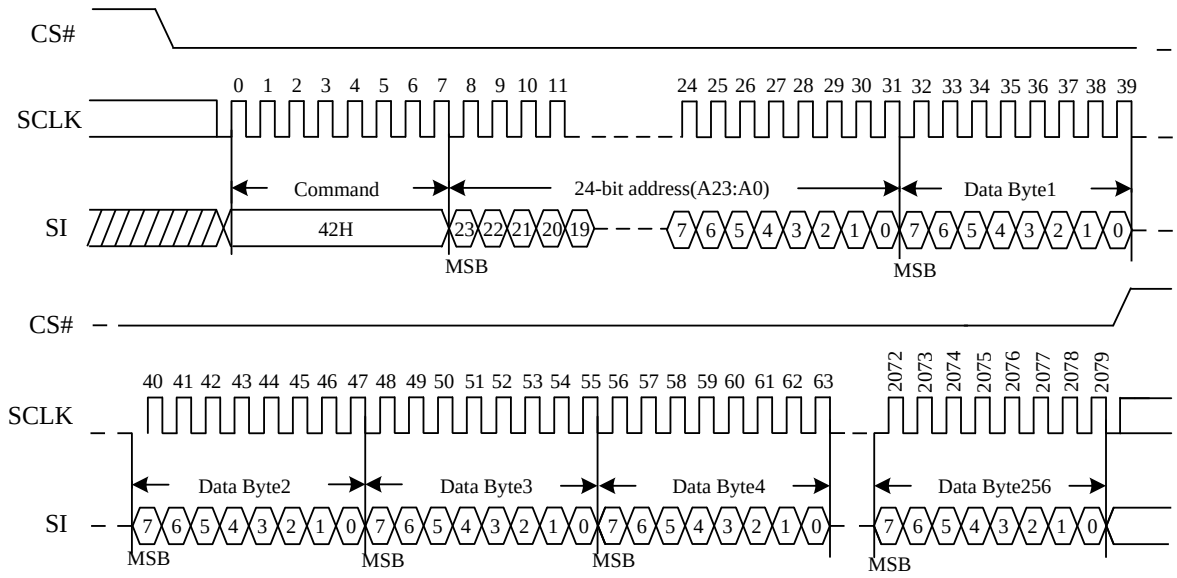

6.4.3. Read Security Register (48H)

The Read Security Registers command is similar to Fast Read command. The command is followed by a 3-byte address (A23-A0) and a dummy byte, each bit being latched-in during the rising edge of SCLK. Then the memory content, at that address, is shifted out on SO, each bit being shifted out, at a Max frequency fC, during the falling edge of SCLK. The first byte addressed can be at any location. The address is automatically incremented to the next address after each byte of data is shifted out. Once the A9-A0 address reaches the last byte of the register (Byte 3FFH), it will reset to 000H, the command is completed by driving CS# high.

Address	A23-A14	A13-A12	A11-A10	A9-A0
Security Registers #1	Don't Care	01b	Don't Care	Byte Address
Security Registers #2	Don't Care	10b	Don't Care	Byte Address
Security Registers #3	Don't Care	11b	Don't Care	Byte Address

Figure 33. Read Security Registers Command Sequence Diagram

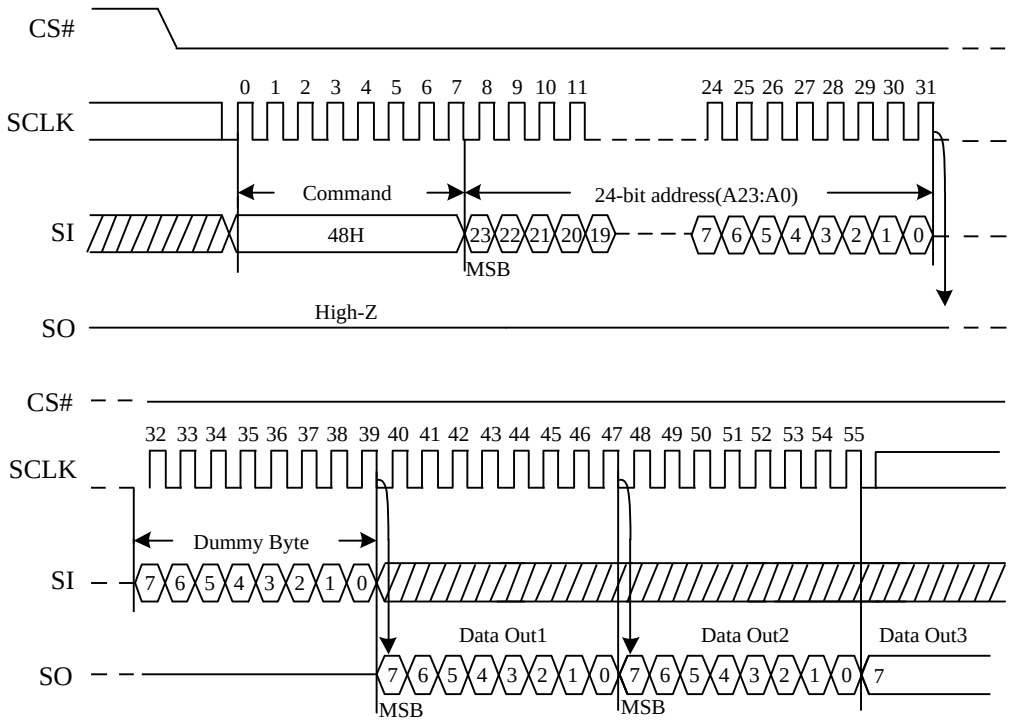

7. ELECTRICAL CHARACTERISTICS

7.1. Power-on Timing

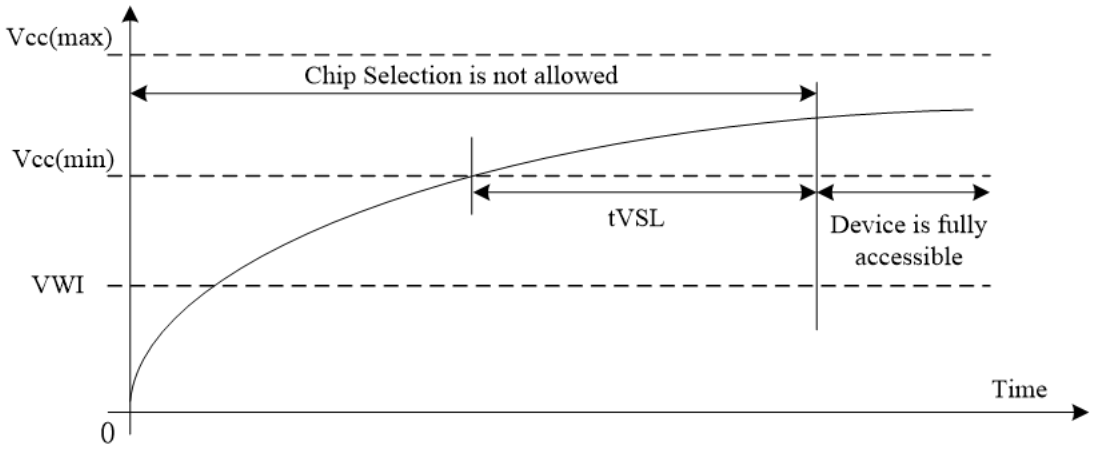

Power-Up Timing and Write Inhibit Threshold

Symbol	Parameter	Min.	Max.	Unit
tVSL	VCC(min) To CS# Low	100		μs
VWI	Write Inhibit Voltage	1.5	2.1	V

7.2. Initial Delivery State

The device is delivered with the memory array erased: all bits are set to 1(each byte contains FFH). For Status Register, all SR bits are 0.

7.3. Absolute Maximum Ratings

Parameter	Value	Unit
Ambient Operating Temperature	-40 to 85 -40 to 105 -40 to 125	°C
Storage Temperature	-65 to 150	°C
Output Short Circuit Current	200	mA
Applied Input/Output Voltage	-0.5 to 4.0	V
VCC	-0.5 to 4.0	V

Input Test Waveform and Measurement Level

Maximum Negative Overshoot Waveform

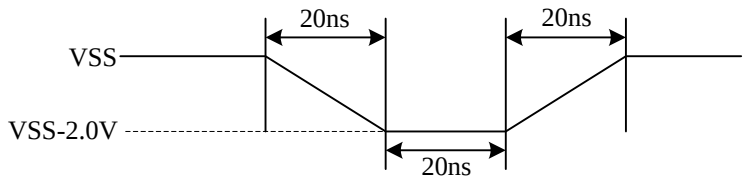

Maximum Positive Overshoot Waveform

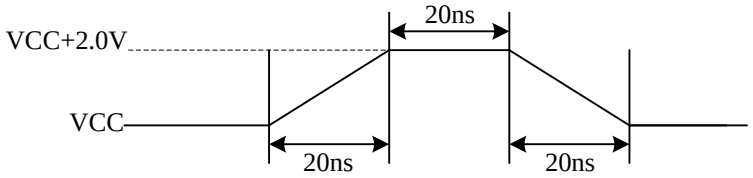

7.4. Capacitance Measurement Condition

Symbol	Parameter	Min	Typ	Max	Unit	Conditions
CIN	Input Capacitance			6	pF	VIN=0V
COUT	Output Capacitance			8	pF	VOUT=0V
CL	Load Capacitance	30			pF	
	Input Rise And Fall time			5	ns	
	Input Pulse Voltage	0.1VCC to 0.8VCC			V	
	Input Timing Reference Voltage	0.2VCC to 0.7VCC			V	
	Output Timing Reference Voltage		0.5VCC		V	

Absolute Maximum Ratings Diagram

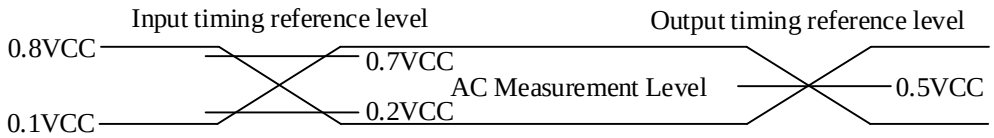

Note：Input pulse rise and fall time are <5ns

7.5. DC Characteristics

XT25F08F (TA=-40°C~85°C / -40°C~105°C / -40°C~125°C, VCC=2.3~3.6V)

Symbol	Parameter	Test Condition	Min.	Typ.(1)	Max. (85°C)	Max. (105°C)	Max. (125°C)	Unit
ILI	Input Leakage Current				±2	±2	±2	µA
ILO	Output Leakage Current				±2	±2	±2	µA
ICC1	Standby Current	CS#=VCC VIN=VCC or VSS		13	35	55	110	µA
ICC2	Deep Power-Down Current	CS#=VCC VIN=VCC or VSS		0.3	10	20	40	µA
ICC3	Operating Current(Read)	CLK=0.1VCC/0.9VCC at 133MHz, Q=Open(*1,*2,*4 I/O)		12	20	25	25	mA
		CLK=0.1VCC/0.9VCC at 80MHz, Q=Open(*1,*2,*4 I/O)		8	13	18	18	mA
		CLK=0.1VCC/0.9VCC at 50MHz, Q=Open(*1,*2,*4 I/O)		5	8	13	13	mA
ICC4	Operating Current(PP)	CS#=VCC		12	20	25	30	mA
ICC5	Operating Current(WRSR)	CS#=VCC		8	12	20	30	mA
ICC6	Operating Current(SE)	CS#=VCC		15	25	30	30	mA
ICC7	Operating Current(BE)	CS#=VCC		15	25	30	30	mA
ICC8	Operating Current(CE)	CS#=VCC		15	25	30	30	mA
VIL	Input Low Voltage		-0.5		0.3VCC	0.3VCC	0.3VCC	V
VIH	Input High Voltage		0.7VCC					V
VOL	Output Low Voltage	IOL=100µA			0.2	0.2	0.2	V
VOH	Output High Voltage	IOH=-100µA	VCC-0.2					V

Note:

1. Typical values given for TA=25°C, VCC=3.3V.
2. Value guaranteed by design and/or characterization, not 100% tested in production.

7.6. AC Characteristics

XT25F08F (TA=-40°C~85°C, VCC=2.3~3.6V, CL=30pF)

Symbol	Parameter	Min.	Typ.(1)	Max.	Unit
fC1	Serial Clock Frequency For: all commands except Read (03H) and Quad I/O Fast Read (EBH) at DC=0 on 3.0V-3.6V power supply			133	MHz
fC2	Serial Clock Frequency For: all commands except Read (03H) and Quad I/O Fast Read (EBH) at DC=0 on 2.7V-3.0V power supply			104	MHz
fC3	Serial Clock Frequency For: all commands except Read (03H) and Quad I/O Fast Read (EBH) at DC=0 on 2.3V-2.7V power supply			86	MHz
fC4	Serial Clock Frequency For: Quad I/O Fast Read (EBH) at DC=0 Quad I/O Fast Read (EBH) at Continuous Read Mode on 2.7V-3.6V power supply			104	MHz
fC5	Serial Clock Frequency For: Quad I/O Fast Read (EBH) at DC=0 Quad I/O Fast Read (EBH) at Continuous Read Mode on 2.3V-2.7V power supply			86	MHz
fR	Serial Clock Frequency For: Read (03H)			80	MHz
tCLH(2)	Serial Clock High Time	45% PC			ns
tCLL(2)	Serial Clock Low Time	45% PC			ns
tCLCH	Serial Clock Rise Time (Slew Rate)	0.2			V/ns
tCHCL	Serial Clock Fall Time (Slew Rate)	0.2			V/ns
tSLCH	CS# Active Setup Time	5			ns
tCHSH	CS# Active Hold Time	5			ns
tSHCH	CS# Not Active Setup Time	5			ns
tCHSL	CS# Not Active Hold Time	5			ns
tSHSL	CS# High Time (read/write)	20			ns
tSHQZ	Output Disable Time			6	ns
tCLQX	Output Hold Time	1			ns
tCLQV	Clock Low To Output Valid			6	ns
tDVCH	Data In Setup Time	2			ns
tCHDX	Data In Hold Time	3			ns
tHLCH	Hold# Low Setup Time(relative to Clock)	5			ns
tHHCH	Hold# High Setup Time(relative to Clock)	5			ns
tCHHL	Hold# High Hold Time(relative to Clock)	5			ns
tCHHH	Hold# Low Hold Time(relative to Clock)	5			ns
tHLQZ	Hold# Low To High-Z Output			6	ns
tHHQX	Hold# High To Low-Z Output			6	ns
tWHSL	Write Protect Setup Time Before CS# Low	20			ns
tSHWL	Write Protect Hold Time After CS# High	100			ns
tDP	CS# High To Deep Power-Down Mode			3	µs
tRES1	CS# High To Standby Mode Without Electronic Signature Read			20	µs
tRES2	CS# High To Standby Mode With Electronic Signature Read			20	µs
tRST_R	CS# High To Next Command After Reset (from read)			30	µs
tRST_P	CS# High To Next Command After Reset (from program)			30	µs
tRST_E	CS# High To Next Command After Reset (from erase)			12	ms
tSUS1	CS# High To Next Command After Erase Suspend			30	µs
tSUS2	CS# High To Next Command After Program Suspend			20	µs
tRS	Latency Between Resume And Next Suspend	150			µs
tW	Write Status Register Cycle Time		1	20	ms
tPP	Page Program Time		0.5	3.5	ms
tSE	Sector Erase Time		55	2800	ms
tBE1	Block Erase Time (32K Bytes)		0.15	3	s
tBE2	Block Erase Time (64K Bytes)		0.25	3.2	s

tCE	Chip Erase Time		3	10	s

Note:

1. Typical values given for TA=25°C, VCC = 3.3V.
2. Clock high or Clock low must be more than or equal to 45%PC. PC=1/fC(MAX).
3. Value guaranteed by design and/or characterization, not 100% tested in production.

XT25F08F (TA=-40°C~105°C, VCC=2.3~3.6V, CL=30pF)

Symbol	Parameter	Min.	Typ.(1)	Max.	Unit
fC1	Serial Clock Frequency For: all commands except Read (03H) and Quad I/O Fast Read (EBH) at DC=0 on 3.0V-3.6V power supply			133	MHz
fC2	Serial Clock Frequency For: all commands except Read (03H) and Quad I/O Fast Read (EBH) at DC=0 on 2.7V-3.0V power supply			104	MHz
fC3	Serial Clock Frequency For: all commands except Read (03H) and Quad I/O Fast Read (EBH) at DC=0 on 2.3V-2.7V power supply			86	MHz
fC4	Serial Clock Frequency For: Quad I/O Fast Read (EBH) at DC=0 Quad I/O Fast Read (EBH) at Continuous Read Mode on 2.7V-3.6V power supply			104	MHz
fC5	Serial Clock Frequency For: Quad I/O Fast Read (EBH) at DC=0 Quad I/O Fast Read (EBH) at Continuous Read Mode on 2.3V-2.7V power supply			86	MHz
fR	Serial Clock Frequency For: Read (03H)			80	MHz
tCLH(2)	Serial Clock High Time	45% PC			ns
tCLL(2)	Serial Clock Low Time	45% PC			ns
tCLCH	Serial Clock Rise Time (Slew Rate)	0.2			V/ns
tCHCL	Serial Clock Fall Time (Slew Rate)	0.2			V/ns
tSLCH	CS# Active Setup Time	5			ns
tCHSH	CS# Active Hold Time	5			ns
tSHCH	CS# Not Active Setup Time	5			ns
tCHSL	CS# Not Active Hold Time	5			ns
tSHSL	CS# High Time (read/write)	20			ns
tSHQZ	Output Disable Time			6	ns
tCLQX	Output Hold Time	1			ns
tCLQV	Clock Low To Output Valid			6	ns
tDVCH	Data In Setup Time	2			ns
tCHDX	Data In Hold Time	3			ns
tHLCH	Hold# Low Setup Time(relative to Clock)	5			ns
tHHCH	Hold# High Setup Time(relative to Clock)	5			ns
tCHHL	Hold# High Hold Time(relative to Clock)	5			ns
tCHHH	Hold# Low Hold Time(relative to Clock)	5			ns
tHLQZ	Hold# Low To High-Z Output			6	ns
tHHQX	Hold# High To Low-Z Output			6	ns
tWHSL	Write Protect Setup Time Before CS# Low	20			ns
tSHWL	Write Protect Hold Time After CS# High	100			ns
tDP	CS# High To Deep Power-Down Mode			3	µs
tRES1	CS# High To Standby Mode Without Electronic Signature Read			20	µs
tRES2	CS# High To Standby Mode With Electronic Signature Read			20	µs
tRST_R	CS# High To Next Command After Reset (from read)			30	µs
tRST_P	CS# High To Next Command After Reset (from program)			30	µs
tRST_E	CS# High To Next Command After Reset (from erase)			12	ms
tSUS1	CS# High To Next Command After Erase Suspend			30	µs
tSUS2	CS# High To Next Command After Program Suspend			20	µs
tRS	Latency Between Resume And Next Suspend	150			µs
tW	Write Status Register Cycle Time		1	20	ms
tPP	Page Program Time		0.5	4	ms
tSE	Sector Erase Time		55	2800	ms
tBE1	Block Erase Time (32K Bytes)		0.15	3.2	s

tBE2	Block Erase Time (64K Bytes)		0.25	3.5	s
tCE	Chip Erase Time		3	20	s

Note:

1. Typical values given for TA=25°C, VCC = 3.3V.
2. Clock high or Clock low must be more than or equal to 45%PC. PC=1/fC(MAX).
3. Value guaranteed by design and/or characterization, not 100% tested in production.

XT25F08F (TA=-40°C~125°C, VCC=2.3~3.6V, CL=30pF)

Symbol	Parameter	Min.	Typ.(1)	Max.	Unit
fC1	Serial Clock Frequency For: all commands except Read (03H) and Quad I/O Fast Read (EBH) at DC=0 on 3.0V-3.6V power supply			133	MHz
fC2	Serial Clock Frequency For: all commands except Read (03H) and Quad I/O Fast Read (EBH) at DC=0 on 2.7V-3.0V power supply			104	MHz
fC3	Serial Clock Frequency For: all commands except Read (03H) and Quad I/O Fast Read (EBH) at DC=0 on 2.3V-2.7V power supply			86	MHz
fC4	Serial Clock Frequency For: Quad I/O Fast Read (EBH) at DC=0 Quad I/O Fast Read (EBH) at Continuous Read Mode			50	MHz
fR	Serial Clock Frequency For: Read (03H)			80	MHz
tCLH(2)	Serial Clock High Time	45% PC			ns
tCLL(2)	Serial Clock Low Time	45% PC			ns
tCLCH	Serial Clock Rise Time (Slew Rate)	0.2			V/ns
tCHCL	Serial Clock Fall Time (Slew Rate)	0.2			V/ns
tSLCH	CS# Active Setup Time	5			ns
tCHSH	CS# Active Hold Time	5			ns
tSHCH	CS# Not Active Setup Time	5			ns
tCHSL	CS# Not Active Hold Time	5			ns
tSHSL	CS# High Time (read/write)	20			ns
tSHQZ	Output Disable Time			6	ns
tCLQX	Output Hold Time	1			ns
tCLQV	Clock Low To Output Valid			6	ns
tDVCH	Data In Setup Time	2			ns
tCHDX	Data In Hold Time	3			ns
tHLCH	Hold# Low Setup Time(relative to Clock)	5			ns
tHHCH	Hold# High Setup Time(relative to Clock)	5			ns
tCHHL	Hold# High Hold Time(relative to Clock)	5			ns
tCHHH	Hold# Low Hold Time(relative to Clock)	5			ns
tHLQZ	Hold# Low To High-Z Output			6	ns
tHHQX	Hold# High To Low-Z Output			6	ns
tWHSL	Write Protect Setup Time Before CS# Low	20			ns
tSHWL	Write Protect Hold Time After CS# High	100			ns
tDP	CS# High To Deep Power-Down Mode			3	µs
tRES1	CS# High To Standby Mode Without Electronic Signature Read			20	µs
tRES2	CS# High To Standby Mode With Electronic Signature Read			20	µs
tRST_R	CS# High To Next Command After Reset (from read)			30	µs
tRST_P	CS# High To Next Command After Reset (from program)			30	µs
tRST_E	CS# High To Next Command After Reset (from erase)			12	ms
tSUS1	CS# High To Next Command After Erase Suspend			30	µs
tSUS2	CS# High To Next Command After Program Suspend			20	µs
tRS	Latency Between Resume And Next Suspend	150			µs
tW	Write Status Register Cycle Time		1	20	ms
tPP	Page Program Time		0.5	4	ms
tSE	Sector Erase Time		55	3000	ms
tBE1	Block Erase Time (32K Bytes)		0.15	3.2	s
tBE2	Block Erase Time (64K Bytes)		0.25	3.5	s
tCE	Chip Erase Time		3	20	s

Note:

1. Typical values given for TA=25°C, VCC = 3.3V.

2. Clock high or Clock low must be more than or equal to 45%PC. PC=1/fC(MAX).
3. Value guaranteed by design and/or characterization, not 100% tested in production.
4. For read frequency under Continuous Read Mode under ultra high working temperature, please contact XTX for detail.

Serial Input Timing

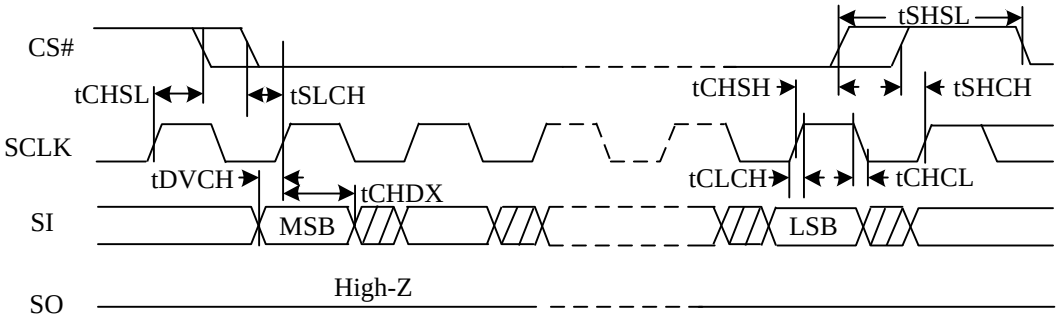

Output Timing

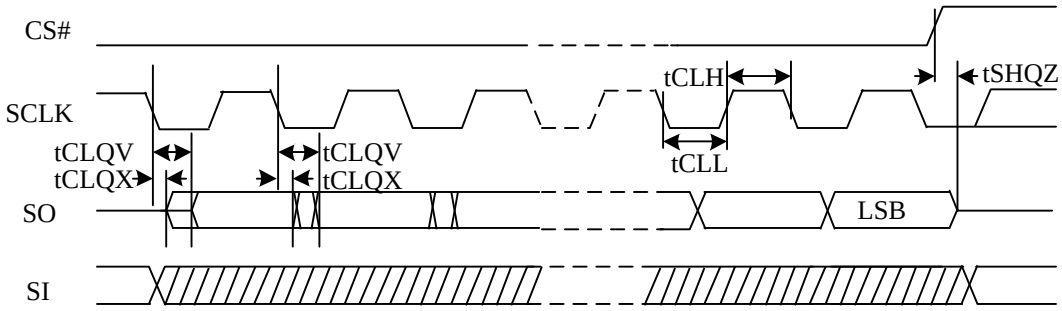

Least significant address bit (LSB) in

Hold Timing

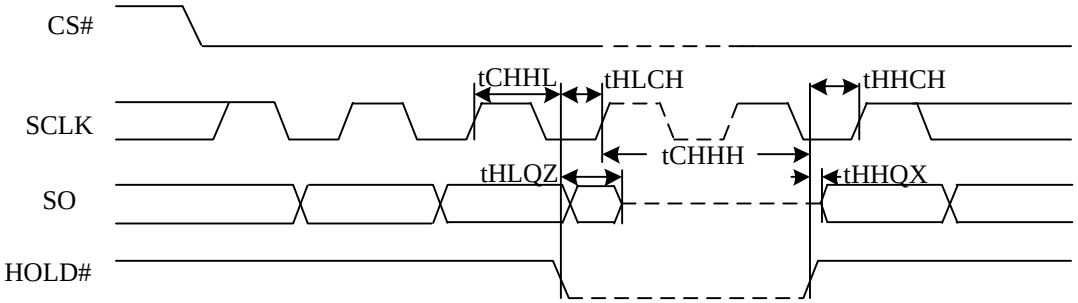

SI do not care during HOLD operation

Resume to Suspend Timing Diagram

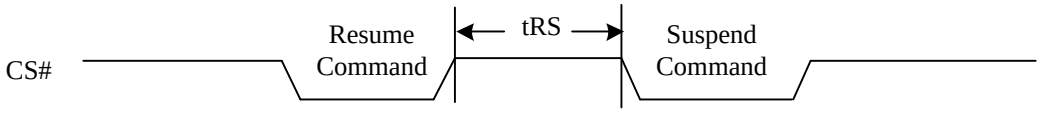

8. ORDERING INFORMATION

The ordering part number is formed by a valid combination of the following

XT 25F 08F SO I G U

Company Prefix

XT = XTX

Product Family

25F = 2.3~3.6V Serial Flash Memory with 4KB Uniform-Sector

Product Density

08F = 08M bit

Product Package

SO = SOP8 150mil

SS = SOP8 208mil

DT = DFN8 2x3x0.4mm

Temperature & Moisture Sensitivity Level

I = Industrial Level Temperature. (-40℃ to +85℃), MSL3
H = Industrial Plus Level Temperature. (-40℃ to +105℃), MSL3
U = Industrial Ultra Level Temperature. (-40℃ to +125℃), MSL3

Green Code

G = Green/Reach Package

Product Carrier

U = Tube; **T** = Tape & Reel; **A** = Tray

9. PACKAGE INFORMATION

9.1. Package SOP8 150mil

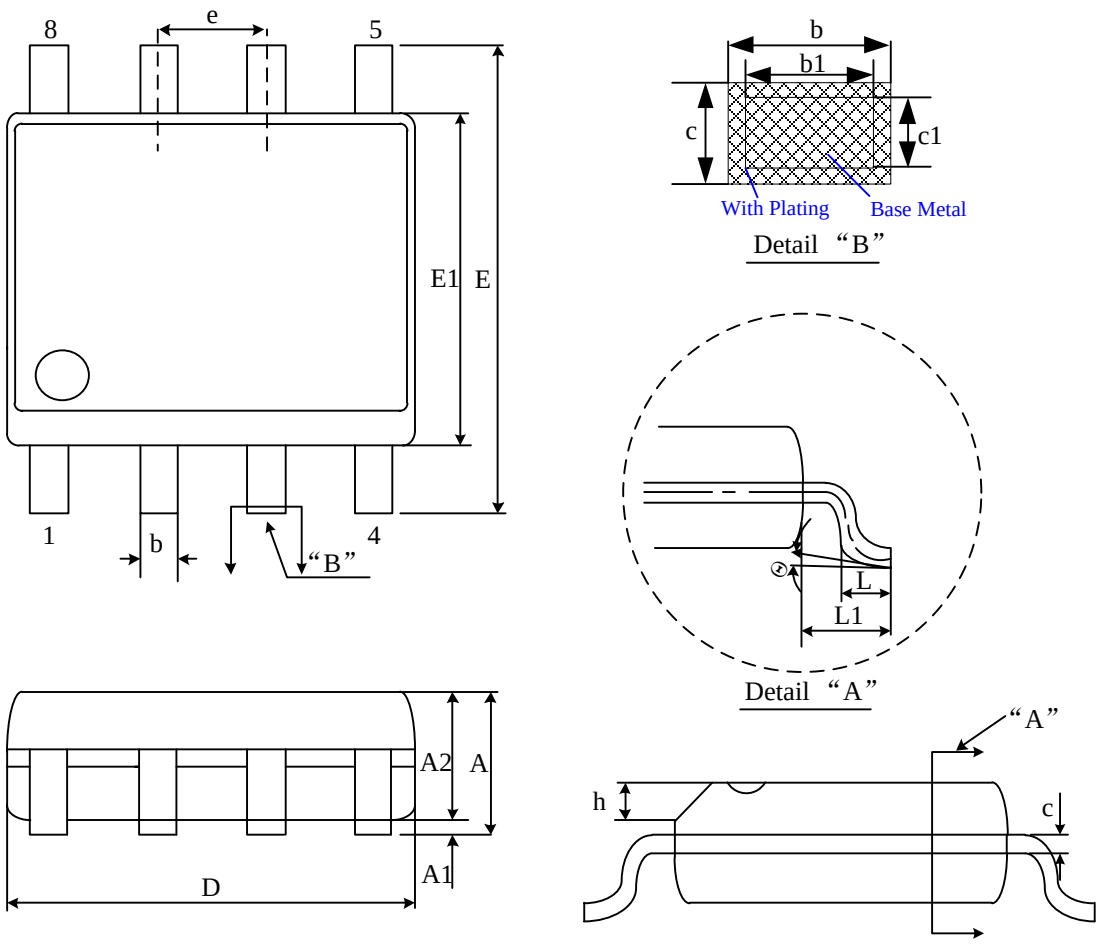

SYMBOL	MILLIMETER		
	MIN	NOM	MAX
A	—	—	1.75
A1	0.10	—	0.25
A2	1.30	1.40	1.50
b	0.39	—	0.47
b1	0.38	0.41	0.44
c	0.20	—	0.24
c1	0.19	0.20	0.21
D	4.80	4.90	5.00
E1	3.80	3.90	4.00
e	1.27BSC		
E	5.80	6.00	6.20
h	0.25	—	0.50
L	0.50	—	0.80
L1	1.05REF		
θ	0°	—	8°

9.2. Package SOP8 150mil For Special Order

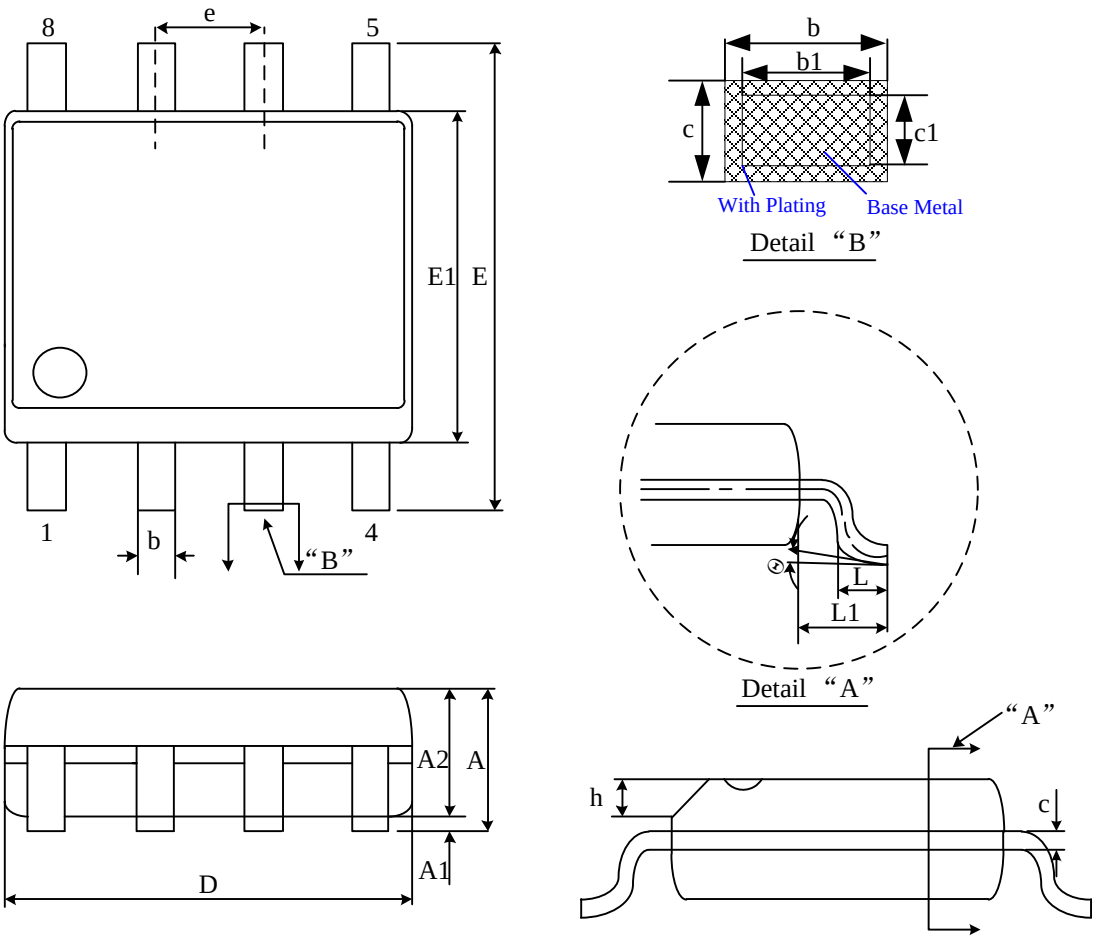

SYMBOL	MILLIMETER		
	MIN	NOM	MAX
A	—	—	1.75
A1	0.10	—	0.25
A2	1.35	1.45	1.55
b	0.31	—	0.51
b1	0.28	0.40	0.48
c	0.17	—	0.25
c1	0.17	0.20	0.23
D	4.80	4.90	5.00
E1	3.80	3.90	4.00
e	1.27BSC		
E	6.00BSC		
h	0.25	—	0.50
L	0.40	—	0.89
L1	1.05REF		
θ	0°	—	8°

9.3. Package SOP8 208mil

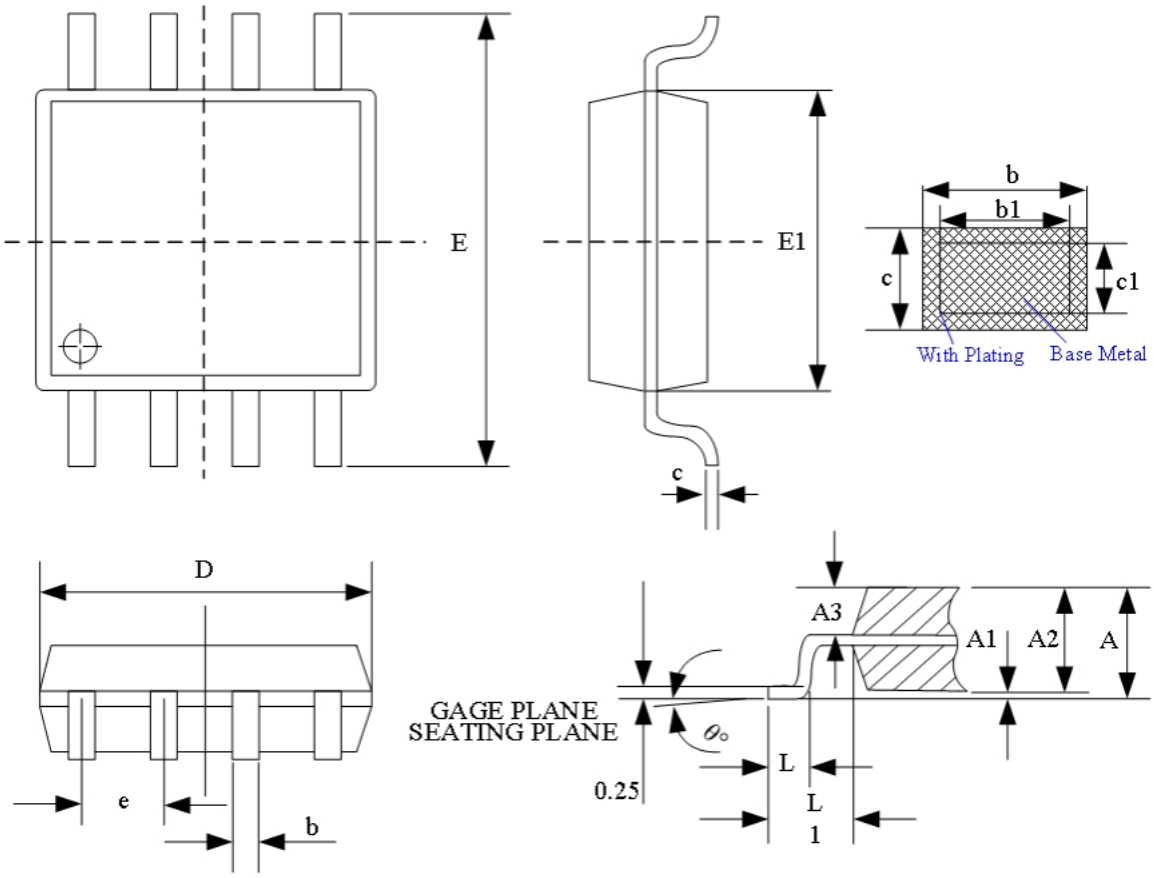

SYMBOL	MILLIMETER		
	MIN	NOM	MAX
A	1.75	1.95	2.15
A1	0.05	0.15	0.25
A2	1.70	1.80	1.90
A3	0.75	0.80	0.85
b	0.33	—	0.51
b1	0.30	—	0.48
c	0.17	—	0.25
c1	0.15	0.20	0.23
D	5.13	5.23	5.33
E	7.70	7.90	8.10
E1	5.18	5.28	5.38
e	1.27 BSC		
L	0.50	0.65	0.80
L1	1.31 REF		
θ	0°	—	8°

9.4. Package DFN8 2x3x0.4mm

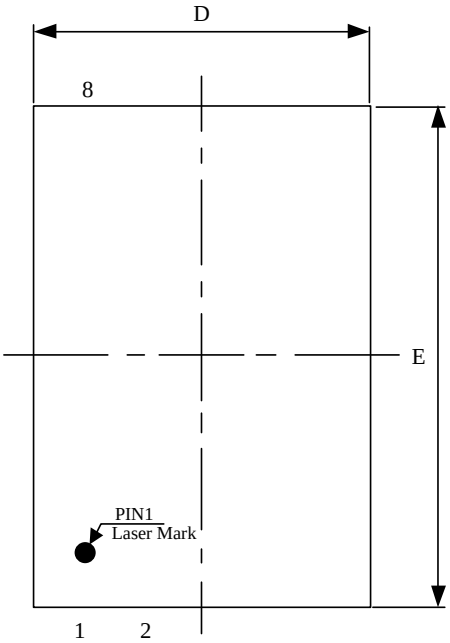

TOP VIEW

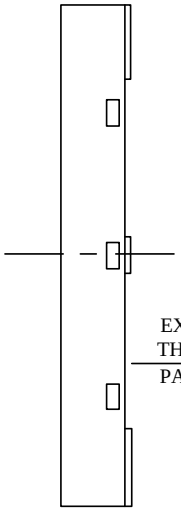

SIDE VIEW

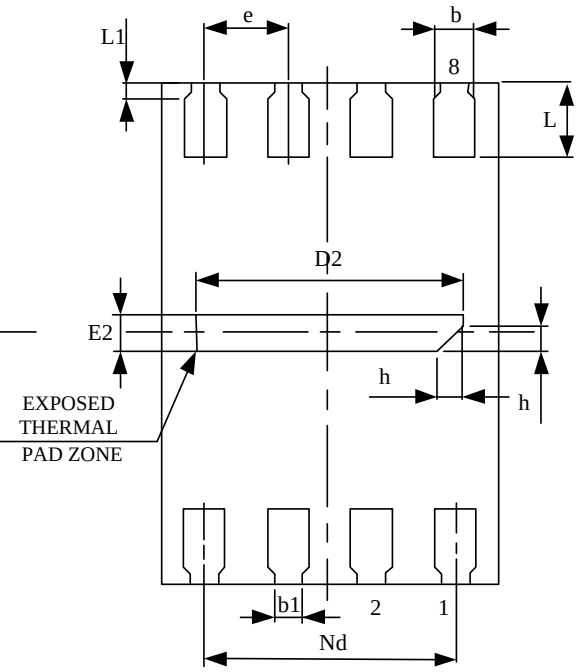

BOTTOM VIEW

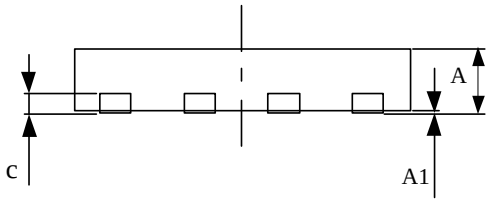

SIDE VIEW

SYMBOL	MILLIMETER		
	MIN	NOM	MAX
A	0.35	—	0.40
A1	0	0.02	0.05
b	0.20	0.25	0.30
b1	0.18REF		
c	0.127REF		
D	1.90	2.00	2.10
D2	1.50	1.60	1.70
e	0.50BSC		
Nd	1.50BSC		
E	2.90	3.00	3.10
E2	0.10	0.20	0.30
L	0.40	0.45	0.50
L1	0.05	0.10	0.15
h	0.10	0.15	0.20

10. REVISION HISTORY

Revision	Description	Date
1.0	Initial version	Nov 19 2023